Hearth and skid pipe refractories for reheating furnace—a review

Sukhendu Dutta, Asim Gupta
Metallurgical & Engg. Consultants Ltd. Ranchi

Introduction

Different types of furnaces are available for the intermediate heating of steel blooms, billets and slabs for final processing by rolling or forging. These reheating furnaces are designed to raise the temperature of steel sufficiently high so that it remains plastic enough in hot condition for its economic reduction by rolling or forging to the desired section.

Reheating furnaces may be divided into two broad groups :

a) Batch type

b) Continuous type. This includes pusher, rotary hearth, walking beam and roller hearth furnaces.

The furnaces may be unizonal or multizonal and are of end discharge or side discharge type. The most commonly used reheating furnaces in modern high capacity mills is the multizone pusher type furnace. This paper deals with the refractory problems of such furnaces only.

Hearth and skid pipes of reheating furnaces are the major problem areas in rolling mills and the need for refractory development in these areas is absolutely essential. The operating conditions in the hearth are exposure to high temperature under high load, contact with highly aggressive mill scale slag, high abrasion mechanical impact, descaling operation & intensive localised heating.

Refractory used in these areas, therefore, should be dense, abrasion resistant having good resistance to mill scale slag and of a composition such that the descaling can be achieved with minimum damage to the brick work.

The operating conditions in the skid pipes imposes severe vibration, impact and abrasion. Furthermore, the cooling water in the skid pipes carries away a sizeable amount of heat from the charge in the furnace which is considered to be a waste.

Hence the refractory used in this

The capacity of multizone pusher type furnaces varies from 200 t/hr. Higher throughputs in the reheating furnaces may be achieved by making more effective use of available hearth area rather than by merely increasing the temperature. There are, however, severe limitations in adopting the later. Figure—1 shows the details of a typical multizone pusher type reheating furnaces.

Considering the service conditions and requirements of the refractory lining, reheating furnaces are subdivided into four main sections. These are roof, burner walls, side walls and hearth. Out of these, the hearth is considered to be the most vulnerable area in the reheating furnaces. The choice of refractories for hearth lining therefore, has a direct bearing on the life of the reheating furnaces. This paper, therefore, emphasizes the refractory problems in general and suggests improvements in the quality of refractories used for lining the hearth of the pusher type furnace.

Hearth

The hearth of a reheating furnace may be defined as the total available area to carry the stock being processed. The hearth includes both solid hearth in soaking zone and the supported skid framework in the tonnage and preheat zones. The maximum temperature in this region is about 1200°C-1250°C for medium carbon steels and to over 1320°C for very low carbon steels.

area should withstand vibration and be resistant to scale attack. Moreover, the lining design should be such that it can reduce the wastage of energy from the charge.

This article reviews some of the latest developments in the areas of hearth and skid pipes of the reheating furnaces which plays a vital role in deciding the overall life of the furnace and in turn the production of the rolling mill.

Soaking zone

The operating conditions in this area pose severe abrasion from moving stock, heavy mechanical impact from time to time, exposure to high temperature under heavy loads and contact with aggressive mill scale slag. These conditions can cause inevitable faster loss in thickness or heavy build up which prevents free movement of the stock, leading to frequent descaling operation.

Refractory for this area should, therefore, be capable of withstanding the above service conditions. In general, the following three types of refractories are used in solid hearth.

a) High alumina brick containing 80-85% alumina

b) Basic brick

c) Electrocast refractories

It has been reported that dense quality high alumina refractories containing 80-85% alumina have been used

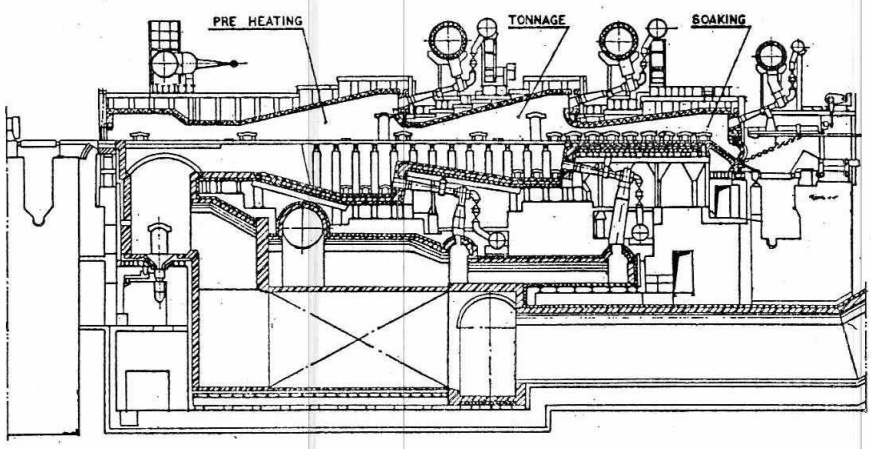

CONTINUOUS FIVE ZONE REHEATING FURNACE
FIG.-1

in solid hearth successfully at relatively low soaking temperature of 1200-1250°C. These bricks show good abrasion resistance. The removal of scales has been easier due to deprepitation of surface layers. The magnesite bricks, in comparison are more resistant to slag but they, however, have a tendency for slag build up which is difficult to remove. At high soaking temperatures. particularly with fluid scale, the greater slag resistance of magnesite becomes the over riding factor in the selection in comparison with high alumina refractories.

In one plant, the high alumina refractory hearth was found to have eroded about 80 mm within a month of the commissioning of the furnace, compelling them to shut down for hearth relining. When the plant had used chrome magnesite bricks for solid hearth lining, it could run the furnace for six months with 45 mm hearth erosion.

The use of electrocast high alumina (73% Al_3O_2) refractories in the solid hearth of the soaking zone produced best results. The extremely high hot strength of electrocast blocks enables them to withstand considerable specific loading. Its crystalline structure together with its compactness minimise the chemical interactions with highly aggressive mill scale slag. They are easy to descale hot or cold without damage to the hearth refractories because of the weak adherence of the scale on them. A strong crystalline bond and high corundum content makes it extremely resistant to high temperature and abrasion resulting in low wear rates. The general fusion cast refractory used for solid hearth is approximately 70-75% Al_2O_3 mullite/zirconia type but use is also made of more expensive α/β alumina product.

Although the cost of electrocast refractories are much more than the

other two types of bricks its application is widely increasing due to its improved performance. For high capacity furnaces, a 12 month's campaign life has been achieved with electrocast refractories, whereas 6 month's life had been achieved with great difficulty by using high alumina or basic bricks in the hearth. Typical analysis of electrocast refractories used for lining the solid hearth is given in Table I.

Skids in the tonnage and preheating zone

The operating conditions in the tonnage and the preheating zones impose severe vibrations, impact and abrasion. The skid pipes installed in this area are subjected to above conditions. Besides, the cooling water in the skid pipes carries away a considerable amount of heat energy from the charge in the furnace.

In the earlier top fired reheating furnaces the hearth is normally solid throughout with skid rails. Various types of lining materials have been used for these skids. They are generally ceramic type made of silicon carbide or high alumina blocks or metallic type with water cooling arrangements.

In modern multizone reheating furnaces with top and bottom firing system, longitudinal water cooled skids with vertical support walls are being envisaged. These longitudinal and vertical support walls have been replaced by a skeletal frame work of water cooled up-rights and cross pipes for supporting the skid system.

In general, the refractory materials used for the skid pipe and the supporting system are as follows :

a) Light weight fireclay and insulating brick shapes.
b) Insulating castables and monolithics
c) Ceramic fibres alone or with combination with other refractory materials.

The light weight fireclay and insulating brick shapes used for skid pipes need frequent replacement due to their quick erosion by slag and low abrasion resistance.

The insulating castables and monolithic ramming masses anchored by studs or mesh, prefired shapes (both the interlocking and pinned) give better life, but these casing materials are also attacked by scale and very often develop cracks due to vibration during sliding of heavy blooms and slabs.

Later these traditional problems of insulating skid rail support pipes of reheating furnaces are being overcome with the aid of Triton kao-wool ceramic fibre blanket and wet felt.

Triton kao-wool can be used continuously at temperature upto 1260°C. It is chemically inert unwetted by molten metal and is completely resistant to vibration as well as to thermal and physical shock.

Two basic construction techniques have been evolved recently. One is

TABLE—1

Physico—chemical characteristics of electrocast refractories for solid hearth

	Materials from		
	France	U. S. A.	Japan
I. Chemical Composition in %			
Al_2O_3	74.0	34.20	75.0
ZrO_2	4.0-5.0	50.13	3.5
SiO_2	19-20.0	14.25	17.0
TiO_2	0.4	0.05	1.5
B_2O_3	—	0.15	—
CaO	0.4	—	0.1
Fe_2O_3	0.6	0.12	1.6
Na_2O	0.9	1.1	—
Specific gravity	3.38	—	3.4
Apparent density, gm/cc	3.00	3.85	—
Cold crushing strength, kg/cm²	>2000	—	3000
Hot crushing strength, kg/cm² :			
at 1300°C	1000	—	—
at 1500°C	300	—	—
Refractoriness under load, ta, °C	>1770	—	—
Linear expansion, %	0.9	0.35	0.7
at	1300°C	1400°C	1000°C
Hot load deformation at 1450°C for 50 hrs. under 2 kg/cm²	—	Nil	—
Modulus of rupture, kg/cm²	—	700.0	—
II. Crystallographic composition, %			
Corundum	43	—	37-42
Zirconia	4.5-5.0	—	—
Mullite	37.0	—	42-47
Vitreous phase	15.0	—	12-17.0

to use the fibre as hot face insulator and the other is to use as a backing insulator to a castable refractory or to fired refractory tiles.

The use of ceramic fibre as a hot face insulator is normally confined to relatively cooler part of furnaces or to furnaces operating under fairly clean conditions or to furnaces where comparatively short periods between over hauls are acceptable and where replacement at each shut down can be economically justified. It is experienced that a skid rail support pipe insulated with approximately 25 mm layer of 128 kg/m^3 of ceramic fibre blanket, absorbs approx. 2600 kcal / m / hr in a furnace operating at 1325C. A pipe with no insulations, operating under similar conditions, would absorb heat at the rate of 88,600 kcal/m/hr. This shows a saving in heat of 86,000 kcal/m/hr.

The ceramic fibres used as a backing insulator to a solid refractory, reduces the harmful effects of heavy vibration and thermal stresses. Moreover, the ceramic fibre is protected by solid refractory due to its good strength, thermal shock resistance and slag resistance. Most important of all is that it improves the overall thermal insulation characteristics of the complete insulation system.

Three alternative designs have been developed for the later system namely.

i) Ceramic fibre blanket protected by refractory tiles with cemented joints

ii) Wet felt protected by a castable.

iii) Ceramic fibre blanket surrounded by inter locking refractory components which eliminate the need for cemented joints.

The method of using refractory tiles with cemented joints was introduced by 'SANAC SPA' in Italy. It consists of a backing layer of ceramic fibre blanket protected by specially shaped interlocking tiles made from SANAC-80.

Wet felt protected by a castable refractory was developed in Japan, particularly for vertical pipes. It consists of 13 mm layer of Triton-kao-wool wet felt protected on the hot face by a dense high alumina castable. The system is supported on 'Y' shaped anchors made from ASTM 304 (18% Cr, 80% Ni) stainless steel. This system is successfully working in Japan and also in UK. In UK both vertical and horizontal pipes were insulated which gave a better life.

The system using ceramic fibre blanket surrounded by interlocking refractory components with dry joints known as 'INSULOC' (Fig. 2 & 3) was developed by Morgan Refractories Limited, England. This system is in operation in about 45 plants in 14 countries namely, UK, West Germany, Japan, France, Belgium,

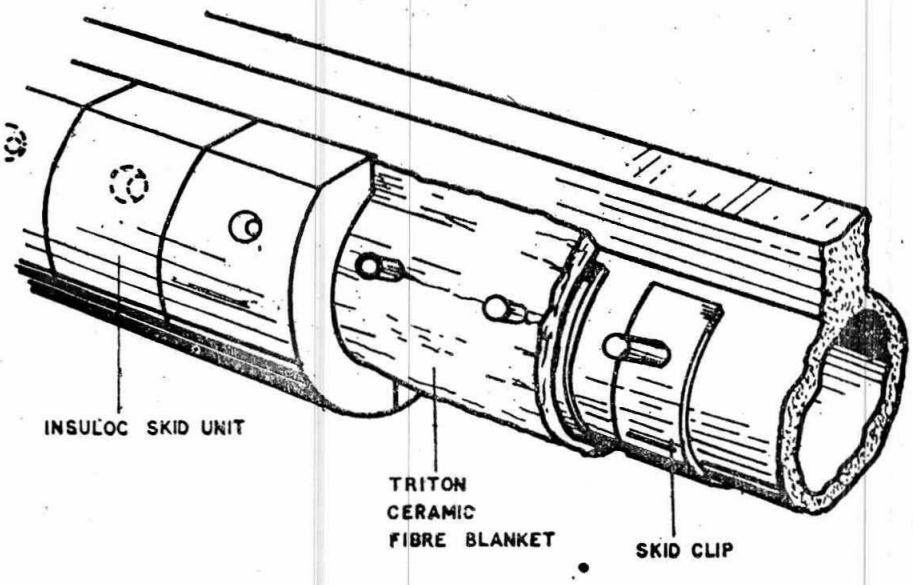

INSULOC ASSEMBLY FOR SKID PIPES

FIG - 2

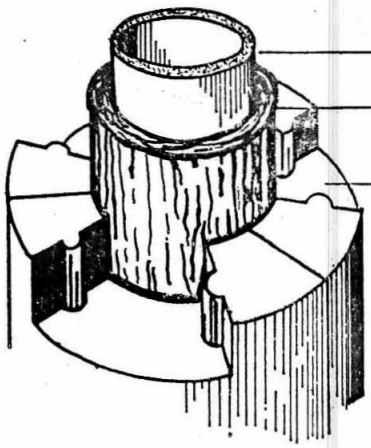

INSULOC ASSEMBLY FOR
SINGLE VERTICAL PIPES

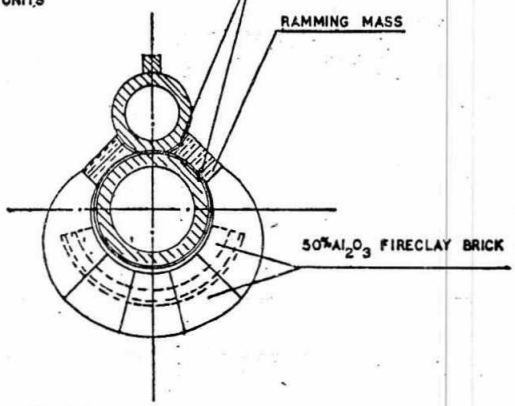

SECTIONAL VIEW OF SKID R
BEING USED IN ONE OF THE S EL PLANTS IN INDIA

FIG-3

Holland, Luxembourg, South Africa etc. It consists essentially of an inner lining of Triton ceramic fibre blanket within an outer shell of fired interlocking units made from specially developed sillimanite composition as given in Table 2.

Insuloc system is probably the most effective method of all. It is specially designed for high thermal efficiency and it gives maximum resistance to slag, gas, thermal shock and vibration. The heat loss through a pipe can be reduced by approximately 80% when insulated by Insuloc system. Assuming a furnace operating temperature of about 1300°C and water temperature of 60°C, comparative estimated heat losses will be as follows :

	Heat loss in kcal/hr/m
Bare pipe	110,800
Typical castable pipe protection	22,300
Insuloc system	3,220

Moreover, as the system is self-locating and self locking, no anchors to the pipes are required and, therefore, no welding is necessary. Both the Insuloc units and the Triton ceramic fibre are clean and easy to assemble. No jointing mortar is required. On an average, an installation can be completed in 3 to 5 shifts by 3 to 4 brick layers.

TABLE—2

Technical data of insuloc compositions

I. Typical chemical analysis	Triangle 63 V sillimanite	Triangle 66 P sillimanite
Al_2O_3	63.0%	66.0%
SiO_2	34.1%	30.1%
Fe_2O_3	0.7%	1.3%
TiO_2	0.4%	0.9%
CaO	0.2%	0.1%
MgO	0.2%	0.2%
Na_2O / K_2O	1.4%	1.2%
II. Typical physical properties		
Apparent porosity, %	20.00	22.10
Bulk density, gm/cm³	2.42	2.36
Cold crushing strength, kg/cm²	682	773
Thermal conductivity, kcal/m/hr/°C	1.36	1.51

The Insuloc system is further developed to provide protection for the skid rails itself known as 'Skid lock' which is currently being used in some of the steel plants of British Steel Corporation, UK, France and Germany.

Conclusion

The hearth of the reheating furnace is considered to be the most vulnerable area due to severe abrasion from moving stock, heavy mechanical impact and sticking effect of mill scale on the surface of the bricks. Electrocast high alumina (73% Al_2O_3) refractories are considered to be the best to withstand all the severe conditions mentioned above.

More extensive use of monolithic material is advocated and it is imperative that further improvements in design will have to be made.

The usual problems such as severe vibration impact and abrasion, as well as considerable heat losses through cooling water in skid pipe system are being overcome with the aid of various types of ceramic fibre blanket used as backing insulation material to solid refractory blocks.

Acknowledgement

The authors are thankful to the management of MECON, Ranchi for their kind permission to present and publish this paper.

Bibliography

1. C. W. HARDY & B. TITTERINGTON—Refractories for continuous reheating furnaces, Transactions & Journal of the British Ceramic Society, January 1973, Vol. 72, No. 1, page 15—20.

2. JOHN FRYATT—Skid rail support insulation in slab reheat furnaces, Steel Times, Vol 203, No. 5; May 1975, page 424-426

3 J. R LAKIN & G. PAYNE—Reheating Furnace Refractories, Iron & Steel, August, 1971, page 247-252.

4. S. K BISWAS & G. BANERJEE—Refractories for Reheating furnace, MECON Journal, June 1977.

5. Dr. ING. PIERGIORGIO FONTANA, Dr. ING. GIOVANNI CARRARO & Mr. TIZIANO BRUNO, Energy Cost Savings as applied to the design of reheat furnaces, Iron & Steel Engineer, July 1977, page 40-51.