LADLE METALLURGY OF STEEL FOR DESULPHURIZATION, BETTER OXIDE PURITY AND MICRO-ALLOYING

Reinhold K.Gross

Klöckner Stahltechnik GmbH
Hamburg

General synopsis of the reasons leading to the introduction of ladle metallurgy and a summary of literature dealing with the use of calcium and magnesium to delusphurize steel.

Description of the Klöckner Stahltechnik plant concept for ladle metallurgy, consisting of a desulphurization plant with an injection vessel, a container unloading system, lance manoeuvring equipment and a specially-designed lance for up to 50 treatments, as well as a ladle cover. Also the micro-alloying plant, e.g. with three injection vessels and nine weighing bins for alloying media such as aluminium, carbon, ferro-titanium or ferro-boron.

Description of the metallurgical results achieved at the Klöckner-Werke AG steelworks desulphurization plant, designed by Klöckner Stahltechnik. Emergence of the significant influence of the ladle lining on the desulphurization process.

As far as the mechanical characteristics of the steel are concerned, not only the quantities of sulphides removed but also their type and size are of decisive influence. Tests have shown that no more manganese sulphide inclusions are found in steels with between 0.3 and 1.5% manganese when the sulphur content is less than 0.008%.

By injection slag into the steel, it is possible to achieve improved oxide purity as well as desulphurization.

The use of a micro-alloying plant can lead to considerable improvements in the recovery rate for elements with a high oxygen affinity such as aluminium, carbon or titanium.

Tests carried out by the Klöckner-Werke AG showed an improvement in the carbon recovery rate from 60-70% using the conventional method, i.e. rinsing the carbon during tapping to 95% when the carbon is injected. The recovery rate for aluminium can also be very much improved by the injection metallurgy method. In this case, rates of more than 80% can be achieved.

INRODUCTION

For over twenty years now, vital metallurgical processes have been simplified by the use of the injection method. At first, this treatment was carried out in the furnace itself - before tapping. The idea was to desulphurize the metal using lime/magnesium mixtures, for example, as described by W.B. Brooks et al (1), or to carry out preliminary deoxidizing or alloying with carbon (2,4).

For economic reasons, work soon began on developing special methods based on the injection process which would enable the metallurgical treatment to be carried out in the ladle instead of in the furnace, thus guaranteeing maxi-

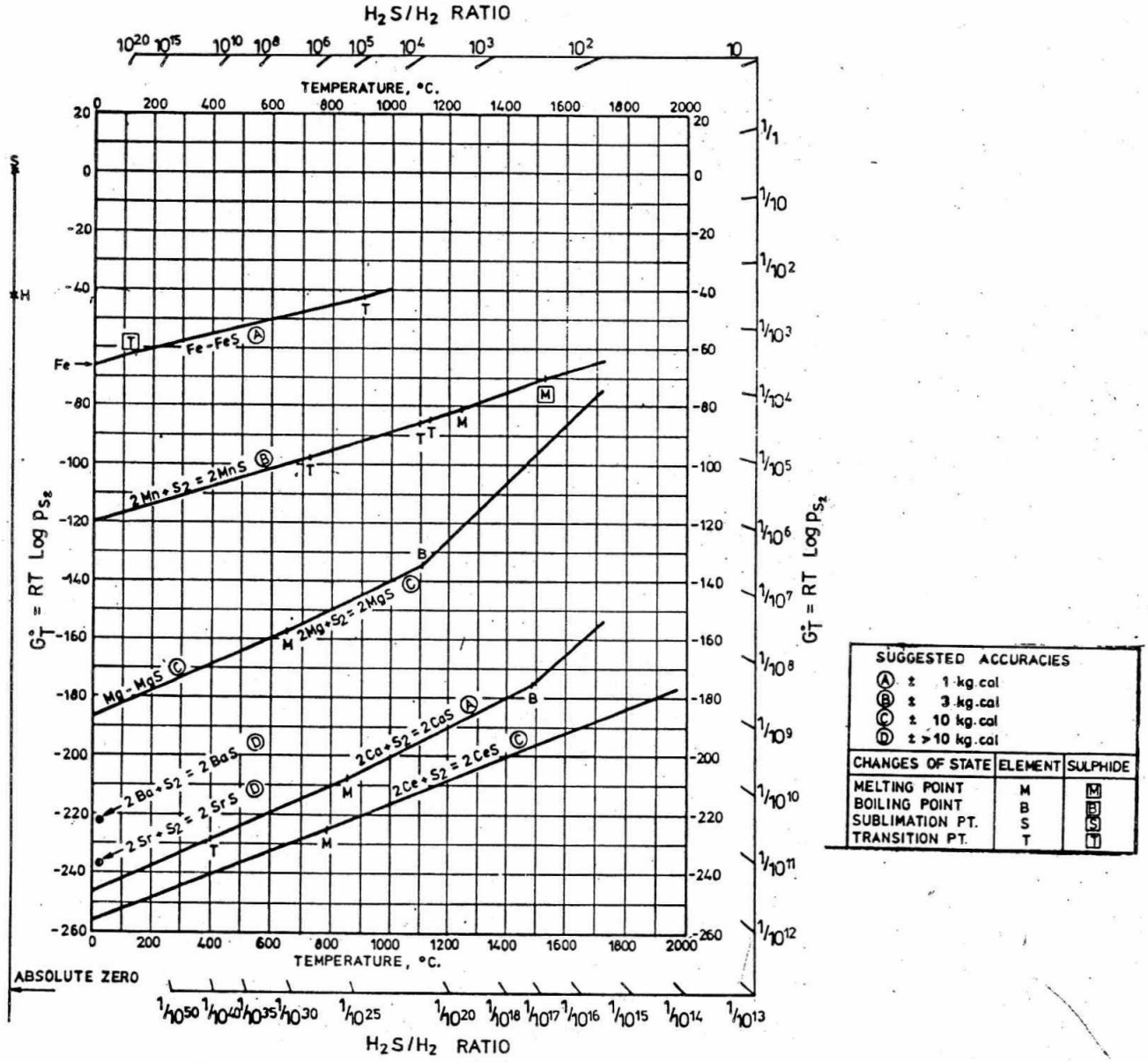

Fig.1 Free-energy diagram for sulphides of metals

mum efficiency at all stages of the process - both from a metallurgical and an economic point of view.

The factor which most strongly influences the technical characteristics and the workability of steel is the presence of sulphur. The desulphurization process is based on the presence of elements with a lower standard free energy of sulphide formation than iron. Fig. 1 shows a section of the familiar "Richardson diagram" (3) for sulphides, according to which desulphurization can best be achieved by using alkaline earth or related compounds and alloys.

The use of calcium and calcium alloys is discussed in detail by Y. Kataura and Oelschläger (5).

Magnesium is generally only used for the desulphurization of hot metal. The World Magnesium Conference, held in Oslo from June 23rd to June 26th 1979, gave a broad view of the latest techniques for using magnesium to desulphurize hot metal and steel. H.P. Haastert (6), W. Moore(7) and T.Lehner(8) all described experiments using magnesium in molten steel, whereby the magnesium was injected mixed with lime, fluorspar or alumina, for example.

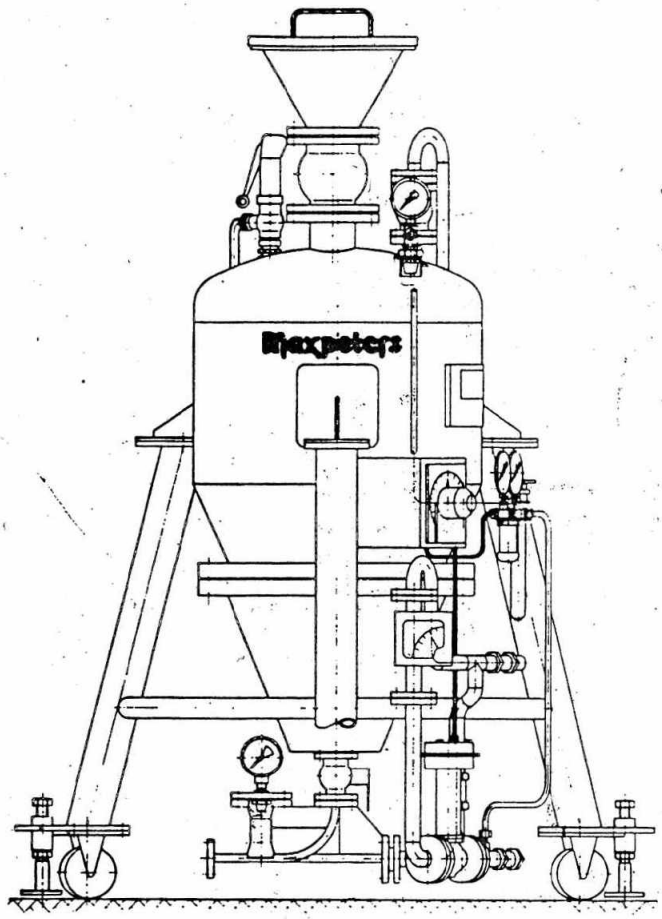

Fig. 2

In the desulphurization of hot metal too, magnesium is usually used in blended form, so as to reduce the turbulence in the ladle caused by the evaporation of the metal (T_{bp}=1105°C) (9).

The introduction of our injection equipment, where the solids delivery rate is approximately 5 kg/min at the minimum carrier gas rate, has prompted new experiments in injecting pure magnesium.

Klöckner Stahltechnik, for example, is currently building a plant designed to desulphurize 270 t charging ladles using magnesium. More plants are already being planned.

In order to enable steelworks to carry out their own trials on the spot, two injection vessels, one approximately of 250 t and the other approximately of 350 t in capacity, have been constructed and are available on loan (Fig.2). The injection rate can be adjusted in stages from about 5 kg to about 50 kg/min in both vessels, depending on the requirements of the individual customer and the metallurgical process involved.

Gas consumption is kept to a minimum; where the injected material is of suitable granular size, the rate is lower than 10 Nl/kg. We hope to be able to report on the results of the next experiments soon.

PLANT DESIGN FOR LADLE METALLURGY

The following illustrations will help to give some idea of the basic principles of our plant designs for ladle metallurgy.

Desulphurization of Steel

Fig. 3 shows a Klöckner Stahltechnik ladle injection plant for steel. This is our standard plant unit and can be extended to fulfil the requirements of the individual customer. Basically, it consists of the following components:

Injection Vessel with Container Unloading Device: The heart of each plant is the Klöckner Stahltechnik injection vessel (item 3), which is available in standard sizes with capacities of 0.5, 0.7, 1.0, 1.5, 2.0 m^3, etc. The injection capacity is variable from 10 to 150 kg/min. The injection capacity cannot be changed continuously during injection, on the basis of physics.

Special Injection Lance: Apart from the injection vessel, perhaps the most important part of the injection plant is the lance. (Fig.4). If this does not function properly, the charging process is likely to be adversely affected. This lance was specially designed by Klöckner Werke for use with molten steel and a patent has been applied for. It ensures that solids are injected smoothly and prevents the outlet from becoming blocked. It also helps prevent the steel from splashing over the edge of the ladle. If fire proof materials are used a lance of this kind has a working life of approximately fifty melts, although minor repairs will be necessary from time to time. Fig.5 compares once only lances with the type which can be used repeatedly. The economic advantages of our system are clearly recognizable.

Dust Extraction Filter: The powdery gases given off when the injection vessel carrier releases its tension are passed into the open via an exhaust

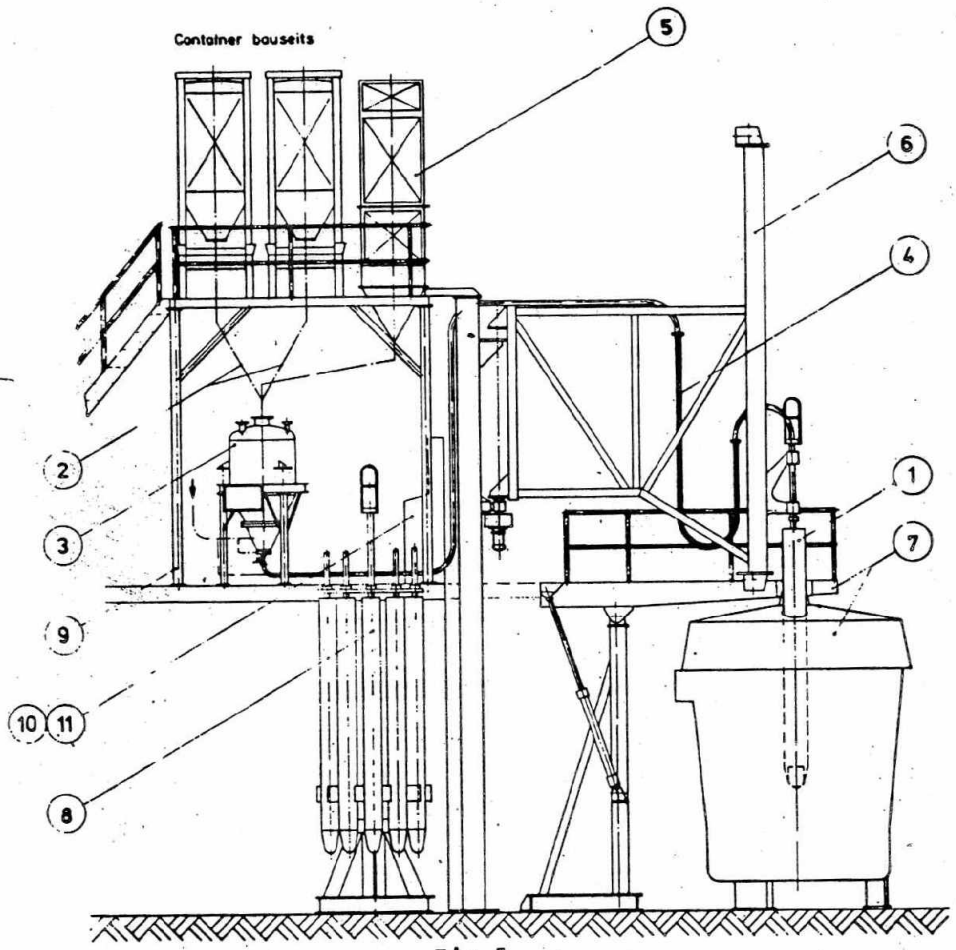

Fig. 3

Comparison of lance cost for a 100 t ladle by using a repeated lance or an one time lance

				repeated DM/t	one time DM/t
refractory					
800 kg ram mass	× 1,965 DM/kg	= 1572,- DM	50 melts	0,31	
12 pieces SR 6	× 12,10 DM/pc	= 145,20 DM	1 melt		1,45
stopper rod head					
1 piece S 6	× 58,82 DM/pc	= 58,82 DM	4 melts	0,15	
1 piece S 6	× 58,82 DM/pc	= 58,82 DM	1 melt		0,59
man power					
1 man × 4 h	× 60,- DM/h	= 240,- DM	50 melts	0,05	
2 men × 0,5 h	× 60,- DM/h	= 60,- DM	1 melt		0,60
reinforcing					
	total	15,- DM	50 melts	0,30	
				Σ 0,81	2,64
relining					
refractory					
45 kg ram mass	× 1,965 DM/kg	= 88,43 DM	2 melts	0,44	
man power					
1 man × 0,5 h	× 60,- DM/h	= 30,- DM	2 melts	0,15	
				Σ 1,40	2,64

Fig. 4

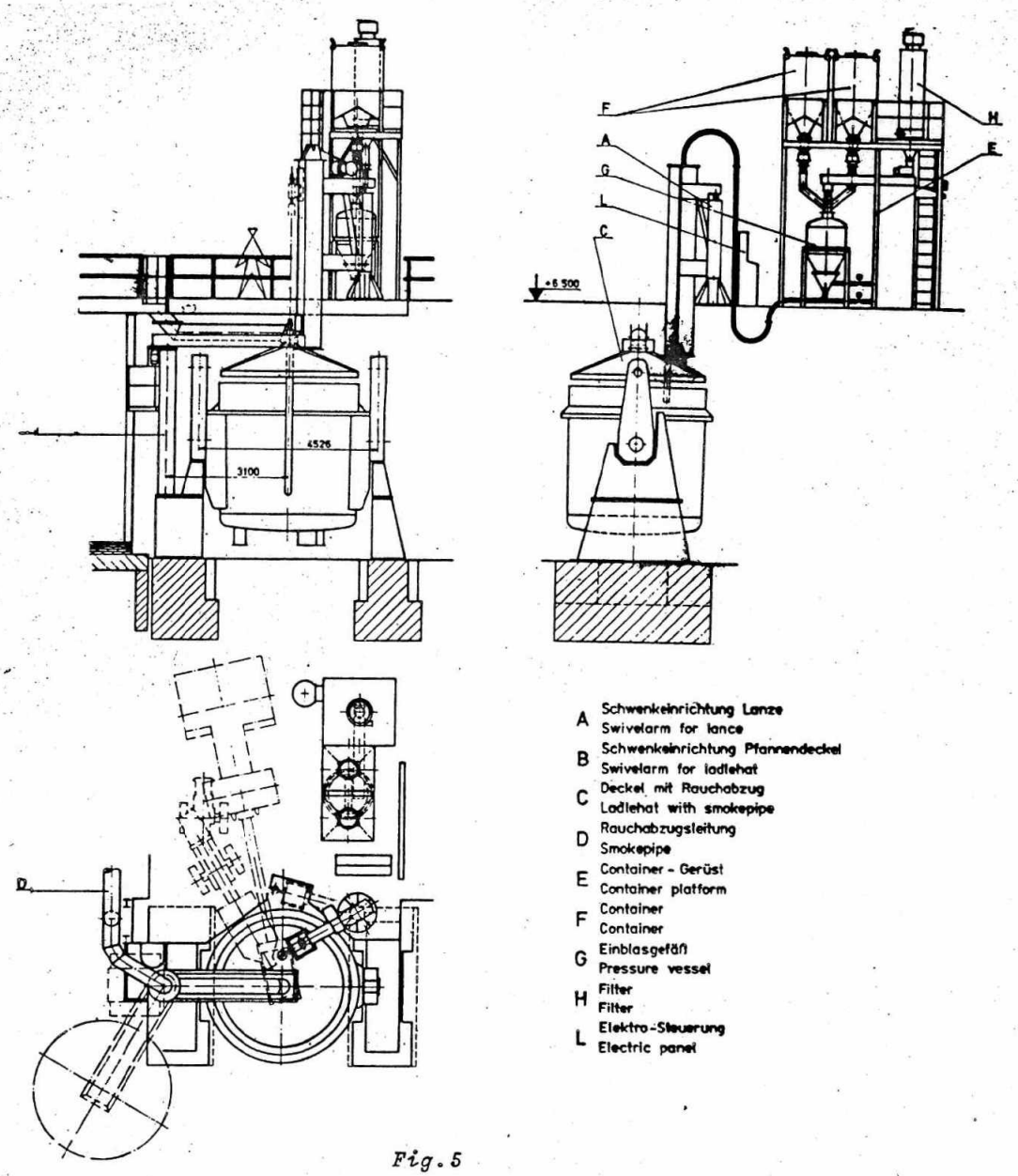

Fig. 5

air filter (item 5). The powder deposit is returned to the injection vessel. The filter can also be used for emptying sacks into the injection vessel.

Lance Manoeuvring and Swivelling Mechanism: The lance menoeuvring device (item 6) is designed to guide the lance and prevent vibration during the injection process. It is equipped with a swivelling mechanisms so that the lance can easily be replaced whenever necessary.

The replacement lances are kept in a rotating holder (item 8) which is so designed as to allow the lances to be passed backwards and forwards easily and smoothly between the arm of the lance manoeuvring device and the holder. The holder also provides a suitable place for minor repairs to the fireproof lance sheating to be carried out.

Ladle Cover with Waste Gas Extractor Hood: The extractor hood has been specially designed to prevent infiltrated air from coming into contact with the molten metal as far as possible during the processing of the steel. All the usual ramming or spraying compounds, fibrous concrete or pure fibre matting are suitable for use as fireproof lining materials.

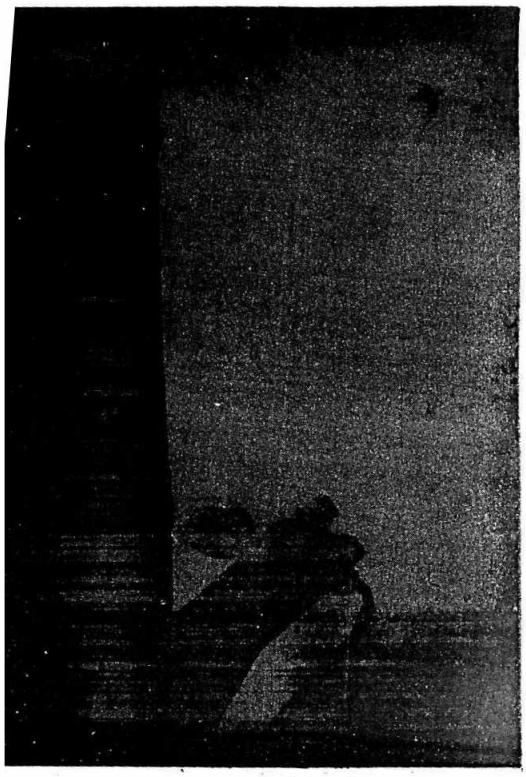

Fig.6

The cover is raised hydraulically that the ladle can be set up at the ocessing station by the pouring crane. e hydraulic fluid used is water-glylic based and non-combustible. The pport frame for the ladle cover has catwalk for sampling and temperature asuring purpose.

Example of an Existing Plant: Fig.6 ows a complete plant, consisting of injection vessel, a delivery unit th two containers, a dust extraction lter, a lance guide, a ladle cover nected to the exhaust powder extract- n system, a holder for spare lances :. Although these secondary compo- nts might seem relatively unimport- :, they are in fact vital for the ficiency and safety of any desulphuri- :ion plant.

Badly designed lance manoeuvring uipment can allow vibration and thus ad to premature wear and tear on the nce. Badly matched cover and dust :raction systems tend to encourage eel deoxidation and nitrogen pick up.

The next two illustrations show lten steel in the ladle during ocessing.

Fig.7

Fig. 7 shows the surface of molten steel during the injection process. It gives a clear indication of the low free board at which this steelworks is able to operate, thanks to our equipment needing such a small quantity of gas for transport purposes. This electric steel plant in West Germany (which has three furnaces - two with 80 t and one with 100 t tap weight) has a gas consumption rate of less than 7 Nl/kg of solid matter.

Fig. 8 reveals much the same characteristics. The main advantages of our injection technique are the low gas consumption rate, which greatly contributes to the economic efficiency of ladle desulphurization, and the extremely small "eye", which means that the surface contact between the metal bath and the atmosphere is kept to a minimum even when the ladle cover is not used. This reduces reactions between the steel bath and the oxygen or nitrogen.

Micro-alloying Plant

Using our injection technique as a basis, a plant has now been developed which alloys up as well as desulphurize and improve the oxide purity of the steel.

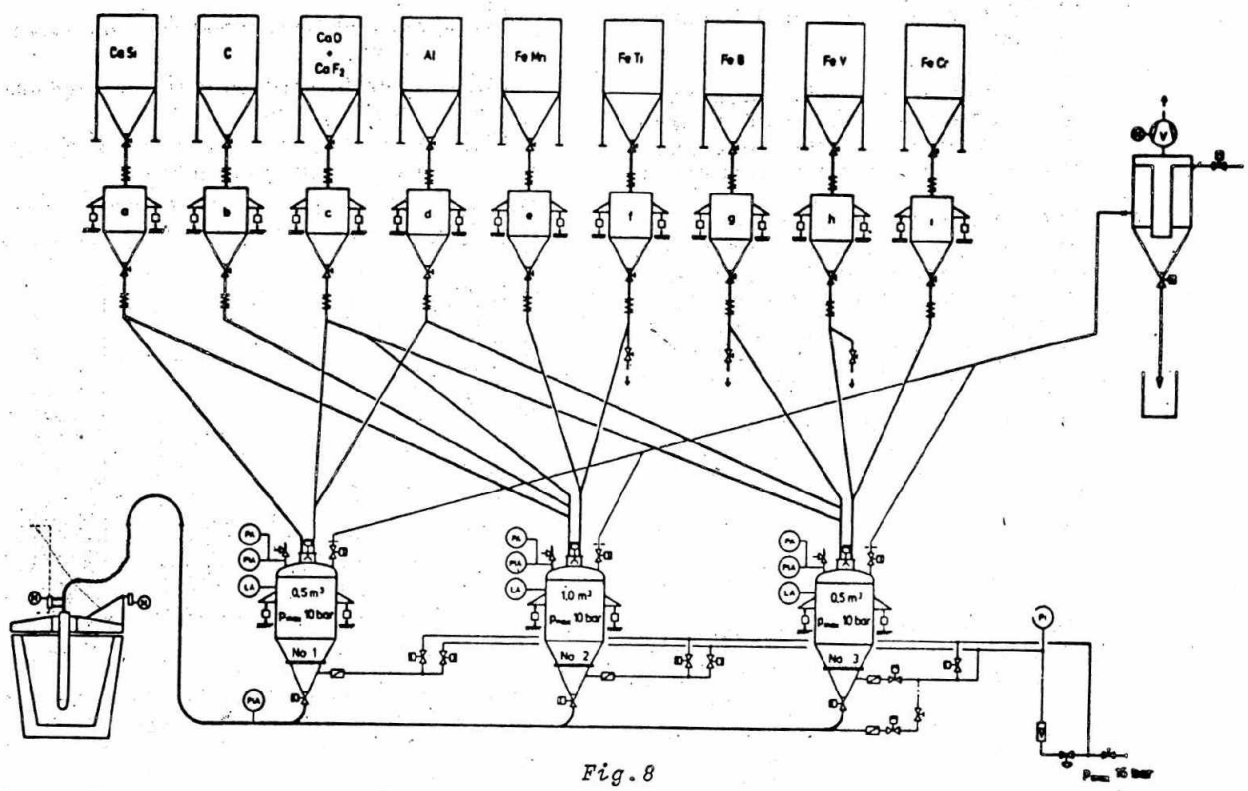

Fig. 8

The advantage of this alloying process is that oxygen-affinitive elements such as carbon, aluminium or titanium can be added with a high yield and an extremely high degree of accuracy (10-13).

Uptil now, steelworks with vacuum equipment available have been using this very successfully for alloying with these elements. A series of studies have been made (14-20), which all point out the advantages of the vacuum alloying method.

If we compare vacuum alloying with injection alloying, it soon becomes apparent that injection alloying offers considerable advantages from an economic point of view. The original cost of an injection plant, for example, is only one tenth of the cost of a vacuum plant. It is also much more economical to run. One disadvantage is, however, that it is not possible to reduce the hydrogen content of the steel using the injection method.

Fig. 9 is a flow diagram for our alloying plant, which consists of the following main components:

1. The container with its unloading device.

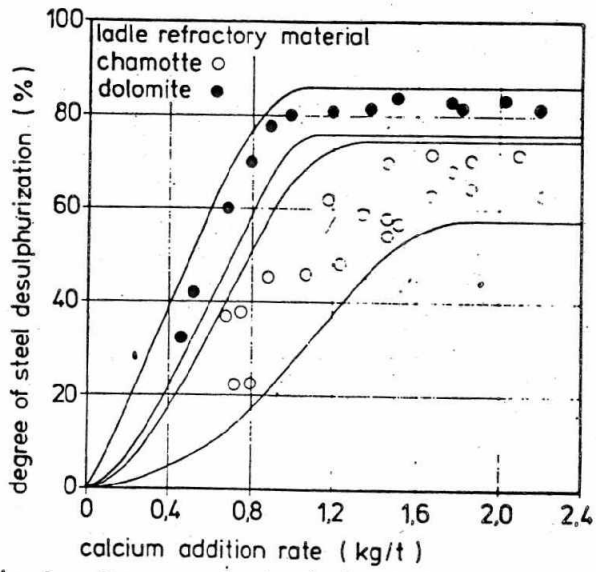

Fig. 9: Degree of steel desulphurization as a function of the calcium addition rate.

2. The weight hoppers and the metering system with the following tolerance rates:

E.g. Aluminium	+/-5 kg
Carbon	+/-5 kg
Calcium silicate	+/-5 kg
Micro-alloys	+/-2.5 kg.

3. The distribution and delivery system.

   It is vital that the material should be properly distributed and dispensed if the weighing equipment is to work accurately.

4. The injection vessels, which are designed to empty their contents into the melt, leave no residue which might spoil the next charge. The system is designed in such a way that injection can take place consecutively or parallel from the injection vessels. This particular system was designed with more than one injection vessel because the customer required the plant to be ready for injection within two or three minutes of the tap analysis results - and thus the required quantities of alloying agent - becoming known. The use of more than one injection vessel means that the plant can operate in parallel some of the time and this helps to fulfil the customer's time requirement.

THE METALLURGICAL RESULTS

In addition to our plant systems for ladle metallurgy, we are also able to offer a wide range of metallurgical know-how. The metallurgical and metallographical studies and experiments were carried out in steelworks belonging to our parent company, Klöckner-Werke AG, (11,13,21-23), which can be contacted direct by customers seeking advice and information. We are thus in a position to offer an efficient injection system and the appropriate metallurgical know-how gathered during practical application of the system.

Desulphurization of steel

Fig.10 shows some of the operating data compiled during steel desulphurization with calcium compounds (21). The influence of the fireproof material of the ladle is clearly visible. The basic lined ladle achieves superior desulphurization results. These experiments were carried out without using the ladle cover. When the ladle cover is used, it is possible to achieve a desulphurization rate of over 90%, since this almost completely cuts out contact with the atmosphere and the resulting reactions.

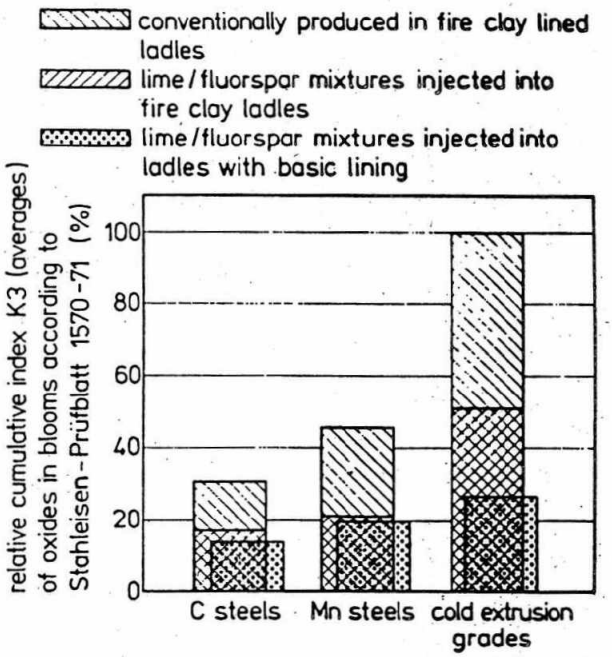

Fig.10: Influence of injection of lime/fluorspar mixtures on oxide cleanness of various steel grades

Apart from the reduction in the quantity of sulphur, the other factor which exerts a vital influence on the mechanical characteristics of the final product is the type and size of the sulphides contained in the steel. Studies carried out by Klöckner-Werke AG indicate that manganese sulphide inclusions are no longer found in steel with a manganese content of between 0.3 and 1.5% when the sulphur content is less than 0.008%(22). The Summenkennwerte K3 and K4 for sulphides in Stahl-Eisen-Prüfblatt 1570-71 are zero. Analysis with a microprobe shows that the remaining sulphur is present in the form of oxide sulphides with cations formed by the elements calcium, aluminium and manganese.

Oxide Purity

If slag - synthetic or blast-furnace slag, for example - is injected instead of calcium compounds, the desulphurization effect is accompanied by improved oxide purity (22,23). Fig.11 shows average values for the relative Summenkennwerte K3 for oxides for various groups of steels. The average K3 value for conventionally-produced cold extrusion steels was taken to be 100%. The carbon content of the three qualities

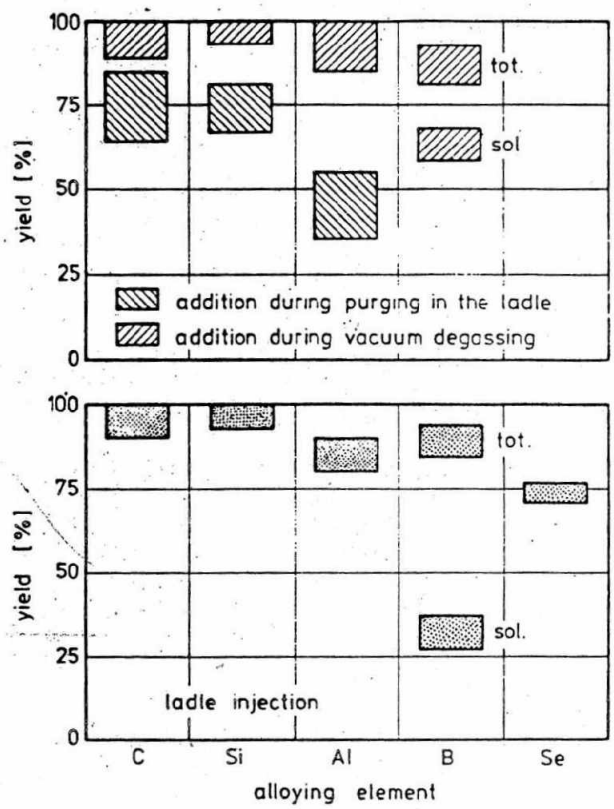

Fig.11: Yield of alloying elements for various methods of addition in the ladle

compared lay between 0.15 and 0.45% (manganese content 1.0-1.5%) for carbon and manganese steels and between 0.07 and 0.15% for the cold extrusion steels. It is interesting to see that the improvement in the grade of purity is at its most striking in steel qualities which have a relatively poor grade of oxide purity in conventional production. Here again, as in the desulphurization process, the influence of the fireproof material of the ladle is clearly visible. It seems that in the case of the aluminium deoxidized qualities, the continued supply of oxygen from the acid lining after the injection process causes further alumina to be formed, which can then no longer react with the injected slag particles and thus be flushed out of the steel.

Micro-alloying

Fig.12 shows a comparison of the different alloying techniques for various elements. It appears from this that the yield for the alloying elements carbon, silicon and aluminium is at its poorest when they are flushed and aluminium is at its poorest when they are flushed

Kohlenstoff:

$\bar{x}_c = \pm 0{,}015\%$ bei Kohlenstoffgehalten $\leq 0{,}30\%$.

$\bar{x}_c = \pm 0{,}020\%$ bei Kohlenstoffgehalten $\leq 1{,}00\%$

Aluminium:

$\bar{x}_{Al} = \pm 0{,}01\%$ bei Aluminiumgehalten $\leq 0{,}060\%$

z.B. $0{,}020\% \leq [Al] \leq 0{,}040\%$

Mangan

$\bar{x}_{Mn} = \pm 0{,}05\%$ bei Mangangehalten $\leq 1{,}00\%$

$\bar{x}_{Mn} = \pm 0{,}075\%$ bei Mangangehalten $\leq 1{,}80\%$

Silicium

$\bar{x}_{Si} = \pm 0{,}025\%$ bei Siliciumgehalten $\leq 0{,}35\%$

Bor

$\bar{x}_B = \pm 0{,}001\%$ bei Borgehalten $\leq 0{,}004\%$

z.B: $0{,}002\% \leq [B] \leq 0{,}004\%$

Vanadium

$\bar{x}_V = \pm 0{,}015\%$ bei Vanadiumgehalten $\leq 0{,}10\%$

z.B: $0{,}050\% \leq [V] \leq 0{,}080\%$

Titan

$\bar{x}_{Ti} = \pm 0{,}01\%$ bei Titangehalten $\leq 0{,}10\%$

z.B: $0{,}040\% \leq [Ti] \leq 0{,}060\%$

Fig. 12

into the ladle in the conventional manner. If these elements are added under vacuum, the yield improves considerably, whereby the extent of deviation depends on the accuracy of sampling and chemical analysis (top section).

Injection produces better results than the conventional flushing method of the elements having a high affinity to oxygen or a high vapour pressure at the temperature of the steel (bottom section). Elements which evaporate at steel production temperatures cannot be used for alloying under vacuum. For these, injection is the only suitable method.

According to the studies carried out by Klöckner-Werke AG, for example, the following deviation range can be achieved for the individual elements using the alloying system shown in Fig. 9.

Carbon

$x_C = +/- 0.015\%$
where the carbon content is $\leq 0.30\%$

x_C = +/- 0/020%
where the carbon content is ≅ 1.00%

Aluminium

x_{Al} = 0.01%
where the aluminium content is ≅ 0.060%
e.g. Al = 0.02% ≅ 0.040%

We are able to guarantee these values because our technique improves the yield of the alloying elements so much. Whereas the yield for carbon is between 60 and 70% using the conventional method (addition during tapping), it increases to 95% if the carbon is injected. A similar improvement in efficiency can be observed when using the same method with aluminium. Here, values of over 80% can be achieved. However, if the chemical composition is to be adjusted to such an exact degree, it is vital that work at all stages of the process be carried out cleanly and accurately. The exact weight of the tap in the ladle must be determined, for example; there must be no slag left in the ladle from the previous charge and the oxidizing slag from the furnace should be held back as far as possible during tapping.

SUMMARY

The Klöckner Stahltechnik system was developed on the basis of practical experience gathered in the Klöckner-Werke AG steelworks and from the thirteen plants already sold. It provides a metallurgically and economically ideal method of desulphurizing molten steel up to a charge weight of 350 t, improving its oxide purity and adding oxygen-affinitive alloys with optimum efficiency and repeatability in the ladle.

The system is constructed according to the principle of meccano-like unit construction, so that special desires of our clients and local conditions in the steel mills can be accommodated.

REFERENCES

1. Brooks, W.B.,J.C.Robertson and J.L.Nichols, "Electric Furnace Process", Chicago Meeting Nov.30-Dec.2, 1960, p.136-147.

2. Küntscher, W., R.Peters, F.Ebeling and H.-J. Schulz, Neue Hütte 7, (1962), 1, p.41-42.

3. Richardson, F.D. and J.H.E. Jeffes, J. Iron Steel Inst. 171(1952), p.165-175.

4. Peters, R., F. Ebeling, H.-J. Schulz, G. Holfert and H.O.Kümpel, Neue Hütte 8(1963), p.43-47.

5. Kataura, Y. and D.Oelschläger, Stahl und Eisen 100 (1980),p.20-30.

6. Haastert, H.P.,W. Klapdar and H. Rellermeyer, "Magnesium in steelmaking" Proc. 1979 World Magnesium Conference, Oslo,Norway, June 23-26, p. 34-36.

7. Moore, W., "Magnesium in Steelmaking" Proc.1979, World Magnesium Conference, Oslo, Norway, June 23-26, p.46-54.

8. Lehner, T. and P.Ritakallio,"Magnesium in Steelmaking" Proc.1979 World Magnesium Conference, Oslo, Norway, June 23-26, p.55-62.

9. Kubaschewski, O., E.L.Evans and C.B. Alcock., "Metallurgical Thermo chemistry", fourth edition. Pergamon Press 1967, p.333.

10. Peters, R., F. Ebeling, H.-J. Holfert and H.O. Kümpel, Neue Hütte 8(1963), p.43-47.

11. Abratis, H., Unpublished "Forschungsbericht der Klöckner-Werke AG 1978".

12. P. Ritakallio, "Scaninject" Proc. inter. Conf. on Injection Metallurgy, June 9-10, 1977, Lulea,Sweden.

13. Abratis, H. and H.-J. Langhammer, Paper presented at the Scaninject II on June 12-13, 1980, IN Lulea, Sweden.

14. Speith, K.G., H. vom Ende and R. Specht, Stahl und Eisen 81(1961) p.1449-1456.

15. Haller, R., Ing.-Arbeit "Staatliche Ingenieurschule für Maschinenwesen", Duisburg 1971.

16. Kreutzer, R.W., Stahl u. Eisen 92(1972), p.716-724.

17. Abratis, H. and H. Maas,Rheinstahl-Technik 1(1967), p.17-25.

18. Pflipsen, H.-D. and R.A. Weber, Stahl u. Eisen 98 (1978), p.747-753

19. Ruttiger, K., Hoesch Berichte 4(1969), p.11-17.

20. Grasshoff, H.-W. and R.Pape, Hoesch Berichte 4(1969), p.17-33.

21. Langhammer, H.J., H.Abratis and P. Patel, "Scaninject" Proc.inter. Conf. on Injection Metallurgy, June 9-10, 1977, Lulea,Sweden.

22. Kosmider, H., H.-J. Langhammer, H. Abratis and K. Schafer Stahl u. Eisen 99(1979), p.1215-1221.

23. Grethe, H.-J. and H.Abratis, Paper presented at the "Giornata di Studio sulla desolforazione in seccia" of the A.I.M. on Dec.13, 1979, Milano, Italy.