PRESENT TRENDS IN METHODS OF PRODUCTION OF ALUMINIUM ALLOY SLABS AND BILLETS FOR WORKING

M. R. Reeve

PRODUCTION of aluminium in all parts of the world is increasing rapidly and continuously at the present time. For example, in Europe, 400,000 metric tons of primary aluminium were produced in 1950, but by 1956 this output was more than doubled. Apart from two minor recessions in 1953 and 1957, an increase has occurred each year.

Increase in output of the aluminium industry as a whole is very evident in the wrought field, and is related increasingly to various applications in industrial and domestic markets. Examples of comparatively new wrought aluminium alloy applications are evident in the building industry, vehicle bodies, shipbuilding and kitchen ware. Greater demand in the wrought industry, more than in other fields of aluminium production, has had to be met by marked changes in production techniques. Such changes have had to enable outputs to be increased whilst maintaining and improving metal quality. The purpose of this paper is to comment on changes in techniques now evident, and to describe briefly some of the newer production methods now being adopted.

The stages in production of slabs and billets are normally as follows :

(1) *Melting :* Virgin ingot and/or scrap are melted and alloying additions made to obtain the desired chemical composition.

(2) *Conditioning :* The molten alloy is treated for removal of gas and oxide, and grain refining additions are made, if necessary.

(3) *Transfer to casting station :* The required quantity of clean, gas-free metal of correct chemical composition is transferred from the furnace to the casting machine.

(4) *Casting :* Production of slabs or billets for rolling, forging or extrusion, and semi-finished rod or strip.

These stages are illustrated in diagrammatic forms in Fig. 1, and the direction of present trends in production methods is shown from left to right across the diagram.

Mr. M. R. Reeve, B.Sc., Senior Research Metallurgist, Foseco International Limited, Birmingham, England.

Melting

In older wrought plants, melting is carried out in fuel fired single hearth reverberatory furnaces, in which alloying and conditioning also take place, and from which the metal is cast. The tendency in modern plants is to use two furnaces in series, or a single large furnace divided into two parts. Melting takes place in the first unit, and metal is then transferred to the second unit, known frequently as a holding bath, for alloying, conditioning and casting. The main advantage of the twin bath arrangement is that greater production rates are possible, because melting in the first unit can continue whilst conditioning and casting are in progress in the second.

In addition, conditioning treatments are more easily controlled, as a major degree of oxide removal from the bath takes place by the very fact of melting separately. By melting under a suitable liquid flux cover and by charging solid scrap into the pool of metal below that cover, oxidation of materials during melting is kept to a minimum and surface oxides on solid scrap are more easily removed. The partially purified metal is then in a better condition for final treatment when transferred to the holding unit. Typical twin bath arrangements are oil fired reverberatory furnaces, in which the melting bath of 12 tons capacity is separated from the holding bath of 6 tons capacity by a refractory bridge as illustrated in Fig. 2. Metal is transferred through a curved external transfer launder. On the continent of Europe, electrical melting is much favoured and a typical installation may consist of a low frequency induction melting furnace and resistance-element holding furnace, each of about 3–4 tons capacity.

Furnace charging arrangements have improved as production rates have increased. Whereas older and smaller furnaces are charged by hand with some assistance from a crane when dealing with the heavier pieces of scrap, mechanical chargers are now in use for the largest furnaces which may be of up to 30 tons capacity. The furnace roof can be made removable to permit charging of large quantities of scrap.

Future designs of furnaces for melting large quantities of aluminium are likely to change considerably,

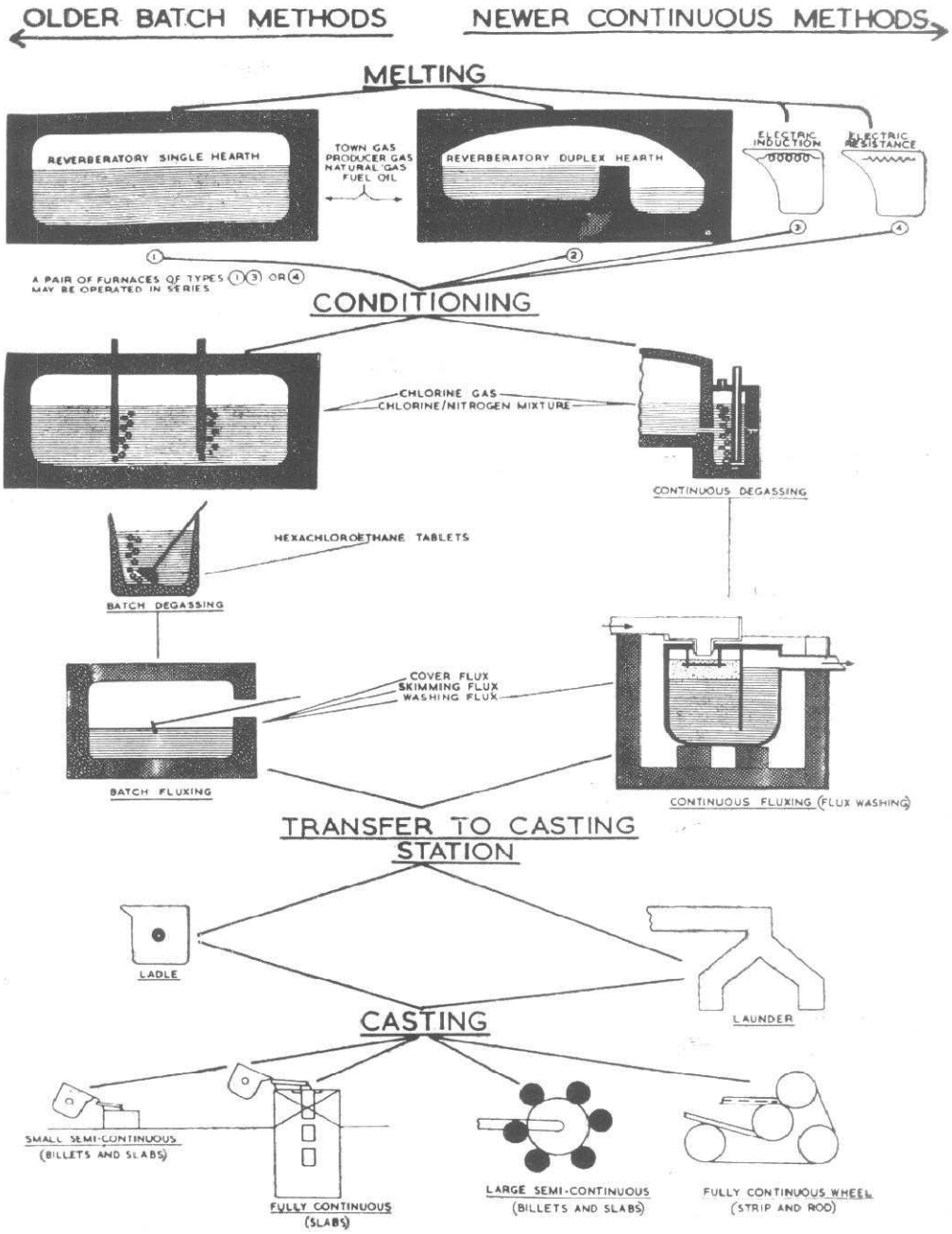

Fig. 1.
Older batch methods—Newer continuous methods.

especially in countries where electric power is relatively expensive and fuel firing must be retained for economic production. The major disadvantage of fuel-firing is that the products of combustion are introduced into the furnace and aluminium is maintained in an oxidising atmosphere, resulting in considerable melting loss. The advent of radiant heat tubes for fuel-fired furnaces, however, means that the products of combustion can be excluded from contact with the metal, and use of such tubes will no doubt be made in the furnace of the future. Tubes could even be submerged in the metal bath itself to obtain optimum heat transfer, but considerable refractory problems would have to be solved before this became a practicable possibility.

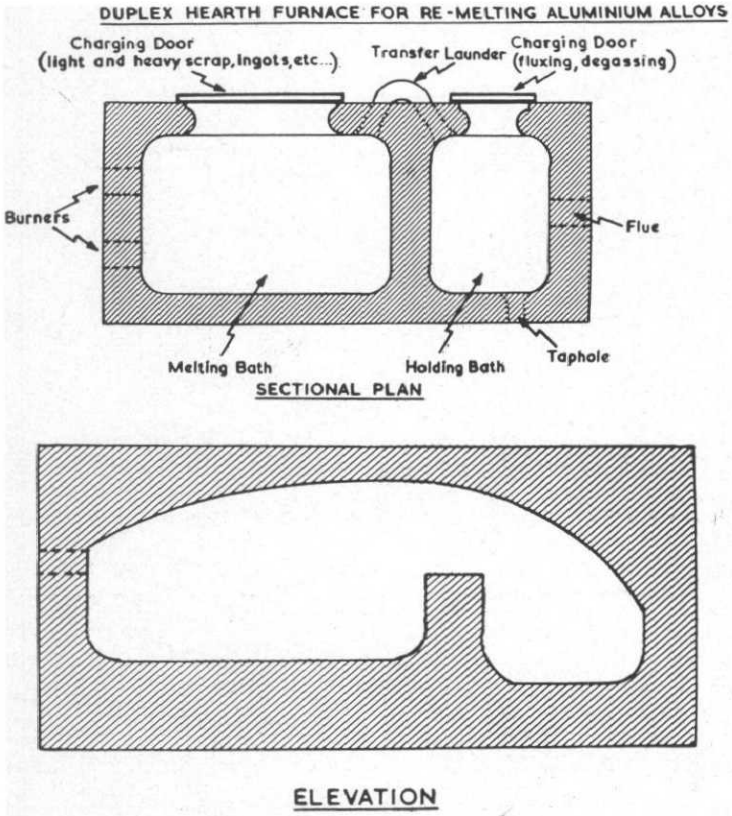

Fig. 2.
Duplex hearth furnace for re-melting aluminium alloys.

Conditioning

Methods for gas and oxide removal and grain refining come under this heading.

Gas removal: As is well known, dissolved hydrogen may be removed from aluminium alloys by treatment with gaseous chlorine, or chlorine-nitrogen mixtures, or by plunging tabletted hexachlorethane into the melt. In older plants, such treatment is typically carried out in the ladle used to transfer metal to the casting station. A ladle contains a relatively deep bath of a relatively small quantity of metal and is therefore a very suitable unit for degassing. The degassing is usually carried out in a fume chamber containing one or more refractory chlorination tubes or facilities for plunging degasser tablets.

In more modern plants, metal is transferred from the holding furnace to the casting station by a launder, and an effort has therefore been made to degas metal in the bath prior to casting. Such degassing is essentially a batch operation, and is relatively inefficient because the metal bath in the furnace is usually shallow with a large surface area. Reabsorption of gas from the furnace atmosphere, particularly in fuel-fired furnaces, is therefore a problem, and further reabsorption from a moist ambient atmosphere by metal flowing in the launder during casting may take place.

Methods of continuously treating the flowing metal between furnace and casting station have therefore been devised, using gaseous chlorine or chlorine/nitrogen mixtures. In one of these illustrated in Fig. 3, flowing metal is directed through a deep, externally heated chamber in which degassing is carried out. In another, metal flows through an enclosed refractory launder containing baffles to the downstream, of which the degassing agent is introduced and made to flow countercurrent to the metal. These methods are more effective than batch treatment in the furnace and problems of gas reabsorption are reduced. They are therefore coming into more general use in wrought plants.

Continuous degassing with chlorine is thus effective in reducing the hydrogen content of molten aluminium and its alloys to very low levels and some removal of oxide may also result from the considerable scavenging which takes place during treatment. However, many chlorine users are aware that residual oxide may yet be a problem in chlorine treated aluminium alloys, and that further treatment is necessary.

Oxide removal: Methods for removal of oxide inclusions suspended in an aluminium melt depend on the use of a washing flux consisting of a mixture of salts fluid at the operating temperature and able to "wet" the solid particles. Inclusions, once "wetted" by the flux, remain in the flux layer, and are removed when the layer is subsequently skimmed off the surface of the bath. It will be seen that very thorough contact between flux and metal is essential for complete removal of oxides suspended in the bath.

The conventional method of using a washing flux is to rabble the fused powder into the metal bath. The flux liquefies rapidly and being less dense than metal, rises

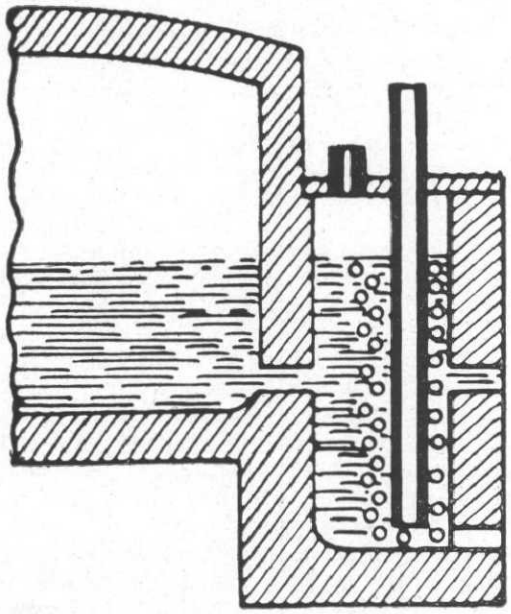

Fig. 3.
Apparatus for chlorination of flowing stream of molten aluminium (Kaiser Patent).

to the bath surface taking with it the oxides. For such a treatment to be wholly successful, a subsequent "holding" treatment is necessary during which metal is allowed to stand with falling temperature under the washing flux cover. During this holding period, further oxides settle out into the flux layer and a degree of outgassing takes place. The process is particularly suited to electric resistance holding furnace in which holding times of as long as 5 to 8 hours may be used. In fuel-fired furnaces, a holding treatment is fully effective only in the absence of flame from the burners and it is therefore the practice to use the fuel to preheat the bath prior to treatment with the fuel supply off. Rate of temperature loss would, in this instance, limit holding time. It is evident that use of a washing flux with a holding treatment is time consuming and inefficient and tends to curtail production rates.

A process of continuous fluxing, analogous to continuous degassing and called flux washing, has therefore been developed. The object of the process is to treat a flowing stream of metal and obtain rapid and intimate flux-metal contact to remove suspended oxides effectively. The treatment unit consists of an externally heated refractory washing chamber containing a deep layer of molten flux retained in the chamber by a refractory baffle which does not reach the hearth. Metal for treatment flows continuously through the washing chamber and washed metal free from flux flows under the baffle and out. In the unit illustrated in Fig. 4. a horizontal plate is introduced into the upper portion of the flux layer to spread the metal stream and improve flux-metal contact. The unit has to be maintained continuously at service temperature and may be based for convenience on a modified commercially available foundry crucible or bale-out basin placed in a small furnace.

Composition of a flux for washing is of prime importance and it is possible to modify the latter to obtain a degree of gas removal and, if desired, grain refining, in addition to oxide removal. Comprehensive metal conditioning may thus be achieved in a single compact treatment unit without the need for any holding time in the furnace other than that needed to bring the metal to the correct temperature for treatment, normally below 720°C. Alternatively, if desired, the process can be made complementary to a continuous degassing unit. Flux washing therefore offers a means of considerably increasing production rates.

Grain refining: The grain size of an aluminium alloy casting depends on the alloy composition and casting conditions, and can be varied, within limits, by control of these factors. The grain size of wrought metal depends partly on initial as-cast grain size and partly on subsequent thermal and mechanical treatment. Fine grain is desirable in a finished or semi-finished product to obtain the optimum combination of mechanical properties and when control of production conditions is unable to produce sufficient artificial means of reducing grain size are resorted to.

The grain of an aluminium alloy casting can be refined by the addition of a small quantity of suitable nucleating elements, of which the most important

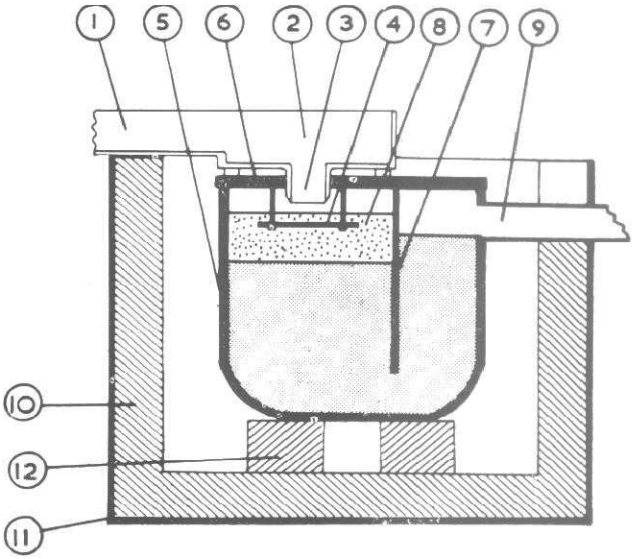

1	Entry Launder	7	Plumbago Baffle
2	Tundish	8	Fluid Flux Layer
3	Downspout	9	Exit Launder
4	Circuler Spreader Plate	10	Refractory Furnace Lining
5	Plumbago Crucible	11	Sheet Steel Retainer
6	Lid	12	Refractory Stool

Fig. 4.
Flux washing tank (Foseco Patent).

examples are titanium and boron. Titanium alone is widely used in the wrought industry, actual nucleation being effected by titanium carbide formed by action of carbon in the melt. The proportion of titanium required to obtain such refinement is quite high, being of the order of 0·15%, and the process suffers from the disadvantage that titanium carbide nuclei tend to aggregate and lose their effectiveness during prolonged holding or after remelting of the alloy. The set of photographs in Fig. 5 shows the progressively increasing grain size of aluminium treated with 0·15% titanium after remelting four times. As will be seen, the sample P.4 shows a coarse grain structure (1-2 mm) despite the fact that the material contains a fairly high titanium content at 0·15%. It is therefore necessary to introduce titanium for grain refining to the bath immediately prior to casting. Where scrap is recirculated for remelting, such grain refinement may result in a build-up of titanium of the alloy to an undesirable extent.

By comparison, titanium and boron together as titanium boride are able to effect nucleation at the much lower levels of 0·03% Ti and 0·003% B and the effect largely persists throughout holding or remelting treatments because the nuclei remain discrete particles.

	6.	P. 1.	P. 2.	P. 3.	P. 4.
TITANIUM CONTENT ...	0·15%	0·15%	0·15%	0·15%	0·15%
GRAIN SIZE ...	·5 mm	·7 mm	·8 mm	·9 mm	1·2 mm

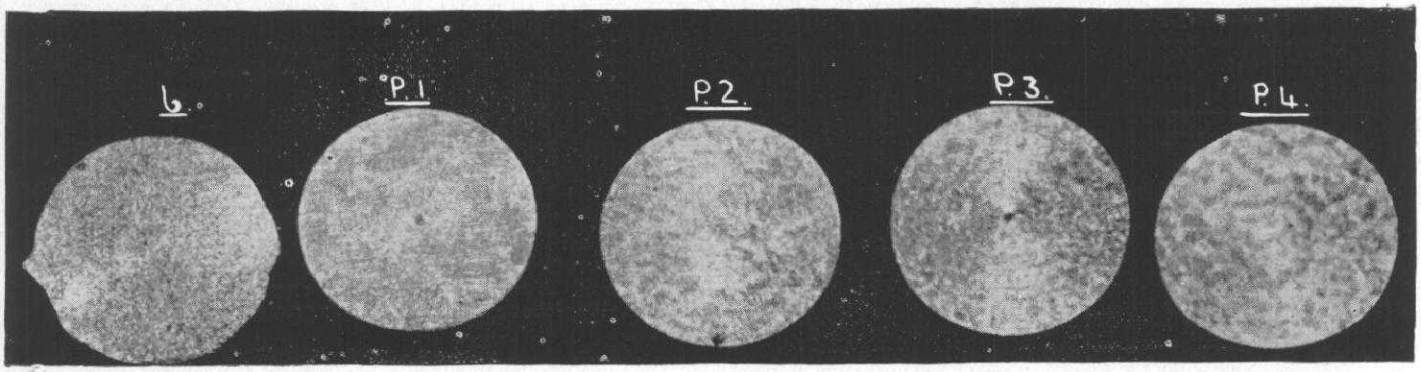

Fig. 5.
The progressive grain growth on remelting samples—Grain refined with titanium hardener.

The effect is clearly illustrated in the set of photographs of macro-etched sections through a rolling slab in Fig. 6. Consequently, the treatment is markedly superior to that with titanium alone and proprietary products are marketed containing reducible titanium and boron salts together with a quantity of hexachlorethane, the vigorous dissociation of which aids dispersal of the nucleating elements. Such grain refiners are plunged, in tabletted form, into the holding bath at a convenient stage prior to casting.

An alternative means of grain refining is, as has already been mentioned, to use a washing flux containing grain refining salts.

Transfer to casting station

In older plants, metal is transferred from the melting furnace or holding bath to the casting machine in a ladle. Ladle sizes have tended to be restricted by plant layout and other considerations and have not kept pace with the quantity of metal required for production of the larger slabs and billets. In these instances, where two or more ladles are required to complete a casting operation, a considerable degree of work study is required to ensure that the right quantity of metal at the right temperature reaches the machine at the right time. In addition, use of ladles has the disadvantage that metal must be tapped from the furnace at a relatively high temperature to allow for the temperature loss in the ladle during transfer and casting. The temperature variation during casting entailed in use of ladles is also undesirable.

In modern plants, metal flows direct from the holding bath via a launder. Control of the metal flow rate is obtained by the degree of tilt of a tilting furnace or by one or more control valves placed in the launder system when a fixed tap-hole is used. Where several slabs or billets are cast simultaneously, metal distribution may be obtained by dividing the launder as in Figs. 7 and 8 or by the use of a tundish. The arrangement has the advantage that the tapping temperature can be relatively low, and the casting temperature maintained relatively constant so that the amount of metal which can be cast at any one time is limited only by the capacity of the holding bath. On the other hand, correct launder design is of prime importance to avoid gas or oxide pick-up or the generation of dross, hence contact of metal with the ambient atmosphere and generation of turbulence of the stream must be minimised. If the drop in metal level is sufficiently great to warrant the use of vertical downspouts, these must not admit air with the metal. If flow control valves are used, these should be seated below the lowest metal surface to avoid inductance of air as shown in Fig. 9. Tap-holes of a fixed furnace are best operated submerged beneath the metal surface in the launder to avoid dross generation. The material of construction of a launder is important; certain refractories absorb moisture at ambient temperatures which may contaminate the metal stream. In general, the shorter the launder and the less the level drop, the less is the liability of the metal to reabsorption of gas or oxide. Many Continental European plants use launders only 30 in long with a level drop of typically 3 in.

Complete enclosure of launders is gaining favour in many plants to reduce contact with the ambient

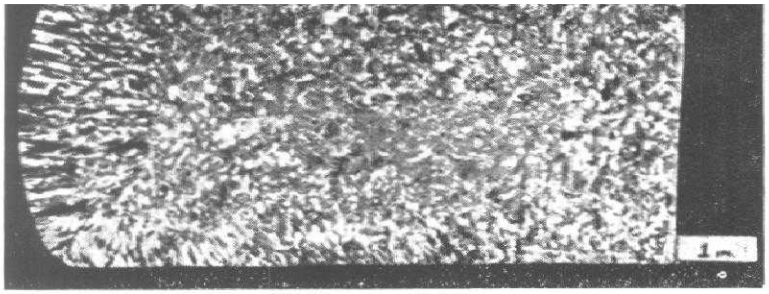

Photograph A.
Before grain refinement.

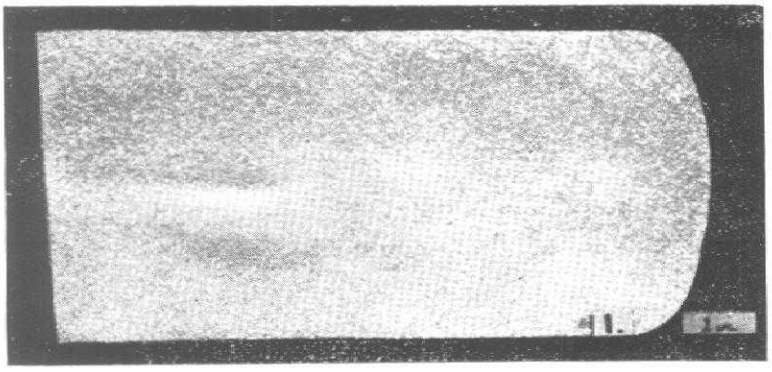

Photograph B.
After grain refinement with 0·03 titanium and 0·003 boron. Very small equiaxed crystals and complete freedom from columnar growth.

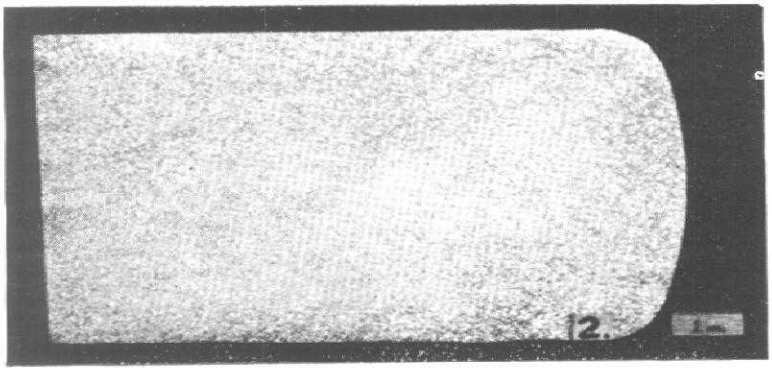

Photograph C.
Structure after a time lag of 1 hour. Almost identical to Photograph B.

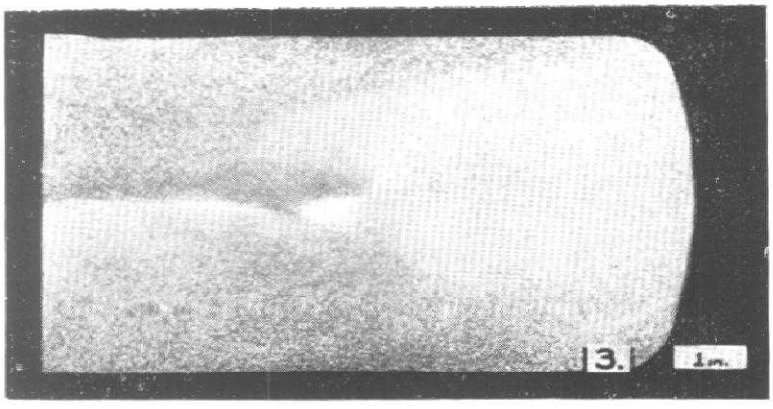

Photograph D.
After pouring 5 tons metal from the 10-ton charge and replacing bath with a further 5 tons without additional grain refinement. Time lag of $2\frac{1}{2}$ hours. Grain refined structure almost wholly retained.

Fig. 6.
A set of macro-photographs showing the grain refinement at various stages.

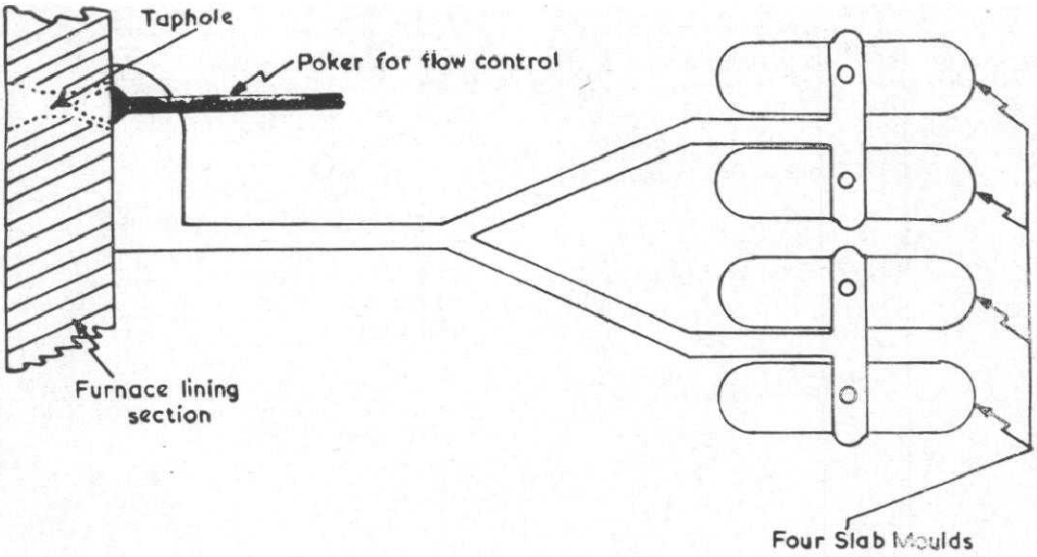

Fig. 7.
Plan of typical launder system feeding four slabs moulds.

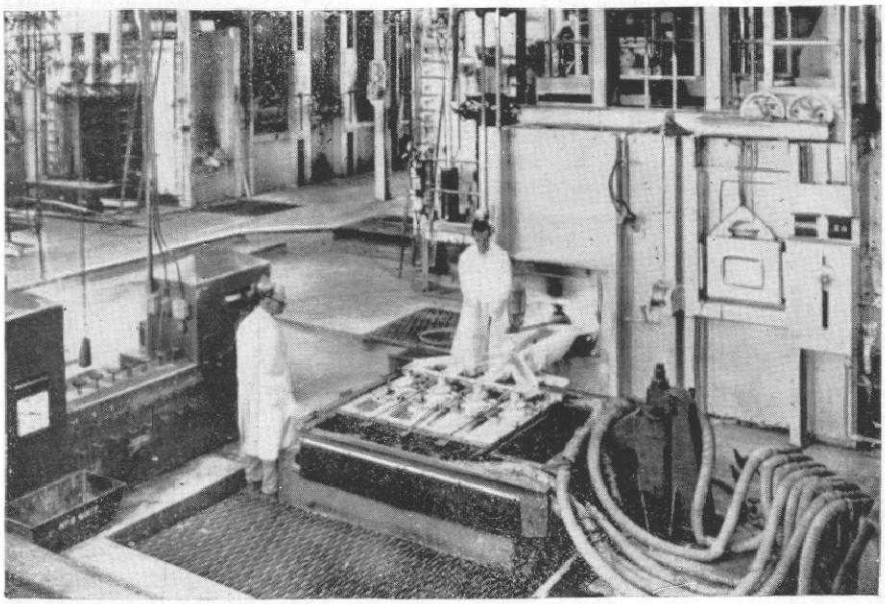

Fig. 8.
Semi-continuous casting of commercial purity aluminium into four slabs, 8 in. × 28 in. × 88 in. long.
(By courtesy at Alcan Industry Ltd.)

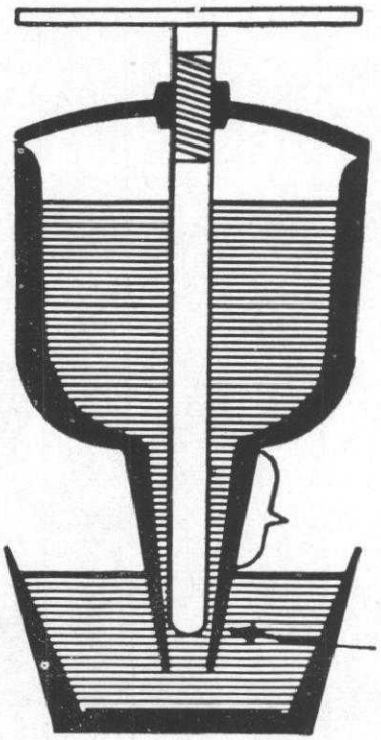

Fig. 9.
Vertical section through needle valve for controlling metal flow between two launders at different levels.

atmosphere. The atmosphere inside the launder may be further controlled by admission under positive pressure of nitrogen or argon or, as has already been mentioned, chlorine gases.

Casting

Chill casting in static moulds of slabs and billets for working has long been superseded in all but a very few

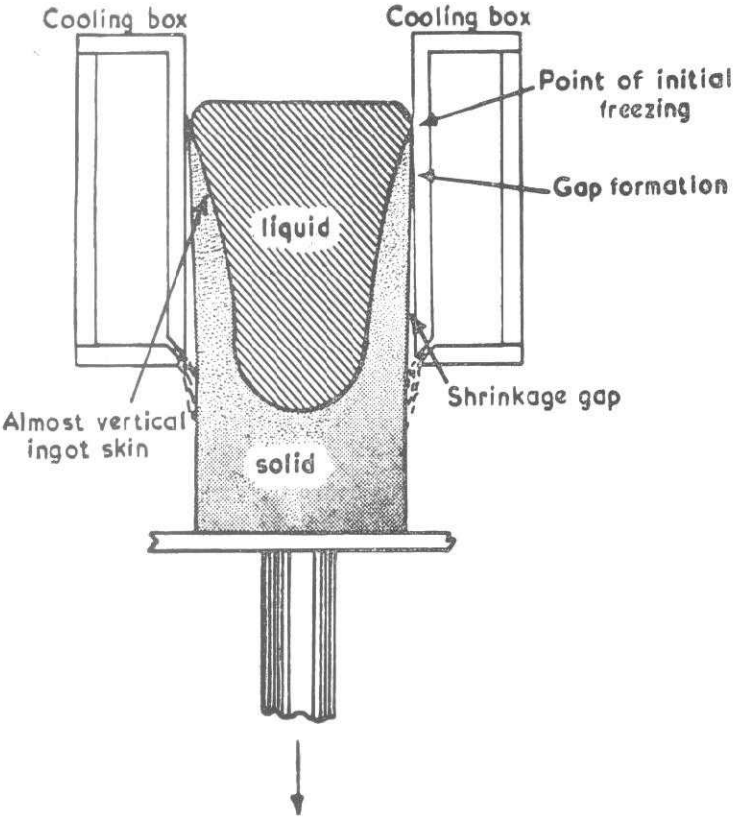

Fig. 10.
Section through mould of semi-continuous casting machine.

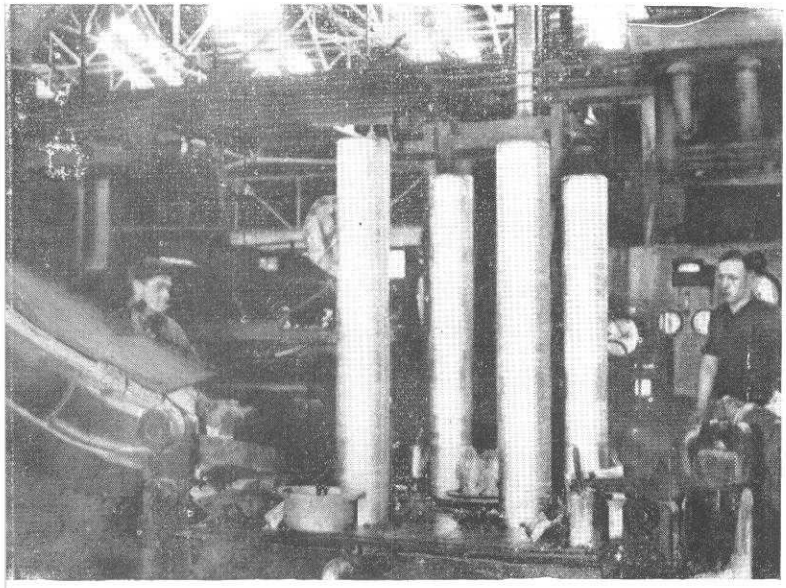

Fig. 11.
Ejection of four circular-section billets from small semi-continuous casting machine. *(By courtesy of James Booth Aluminium Ltd.)*

wrought aluminium plants by semi-continuous methods. The principles of semi-continuous casting are too well known to require more than a brief description. One or more horizontal water-cooled open-ended metal moulds are used, each of which at the commencement of casting is closed by a "stool". All stools are mounted on a common platen which is withdrawn as casting proceeds by mechanical or hydraulic means, as shown in Fig. 10. The closed cavity formed by stool and die is filled with molten metal and as solidification commences, the machine is started and stool and embryo casting withdrawn below the mould. Cooling is effected by water sprays impinging on the outer surface of the mould wall and on the solid skin of the casting itself as it is withdrawn below the skirt of the mould. The process continues until a slab or billet of the required length has been cast, when the supply of metal is stopped and the solid casting ejected from the pit by raising the platen (Fig. 11). Removal from the machine is effected by crane. The size of the casting is defined by the mould cross-section and the depth of the pit into which the platen is lowered. A typical large slab may have a cross-section of 40×8 in and a length of 120 in and weigh rather more than $1\frac{1}{2}$ tons.

Slabs and billets particularly of the higher strength alloys cast by these methods are subject to internal stresses produced by the rapid rates of cooling and the magnitude of the stresses increases with, and tends to impose a limit on, the cross-section of the casting. Control and limitation of the amount and distribution of cooling water has been suggested to reduce the rate of chill and hence the liability to stress.

Such control may be achieved, for example, by removing the fluid coolant at a predetermined distance below the mould skirt by air jets or a mechanical synthetic rubber wiper.

Another feature of semi-continuous casting is their liability to segregation of alloying elements and particularly inverse segregation and exudation of low melting point constituents through the cast skin. Exudation is aided by contraction of the skin away from the mould wall which occurs immediately on solidification leaving an air gap which tends to insulate the metal from the cooling water and retard freezing. Low melting point constituents from the partially solidifying zones of the casting are forced through the skin and reach the surface in the air gap. Hard beads on the slab surface are so formed which are normally removed by milling prior to preheating for working. Milling is an expensive operation requiring costly equipment and, of course, entails the cooling of cast material to room temperature. Means of reducing or eliminating segregation have been suggested to overcome this. One of these, for example, is to use a porous sintered metal skirt to the mould through which water sprays can be forced into the air gap so overcoming the insulating effect. There is no doubt that reduction of segregation to the extent that the need for milling could be obviated would represent a considerable step forward in slab production. Castings could be transferred from the machine to a soaking pit for preheating for working without intermediate cooling to room temperature as

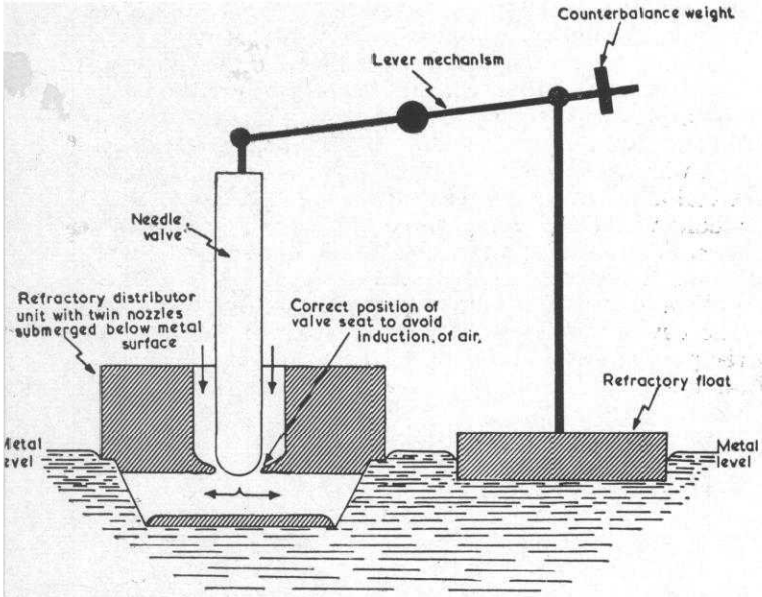

Fig. 12.
A method of introducing metal to slab mould of semi-continuous casting machine.

in wrought steel production, and costly and thermodynamically inefficient cooling and reheating of slabs would be eliminated.

Considering the casting machines themselves, the older semi-continuous type is comparatively small, mechanically or hydraulically operated, and fed with metal from a ladle. The size and number of slabs or billets are restricted. Both this type and the few fully continuous machines in the wrought aluminium industry are being superseded on economic grounds by large hydraulically operated semi-continuous machines fed by a launder from the holding bath and these can cast 6 tons or more of metal in one "drop" (Fig. 8). This quantity of metal may comprise typically four rolling slabs or four to twelve extrusion billets depending on size.

Metal is normally fed to moulds of smaller machines from an open launder, but larger moulds of more modern machines usually employ some form of distributor. For example, metal in a slab mould may be distributed via two refractory nozzles submerged in the molten pool as illustrated in Fig. 12.

The level of the pool in the mould should be maintained constant, because minor variations can have a marked effect on cast structure and the incidence of segregation. Some form of automatic flow regulating device in which a refractory valve operated by a refractory float on the metal surface makes corrective change to rate of flow is now normally employed.

Casting wheels for continuous production of strip and rod

Aluminium alloy strip and rod, in common with the majority of semi-finished products, are produced conventionally by respectively rolling or extruding semi-continuously cast slab or billet. The sequence of operations is comparatively lengthy, and involves the milling of the cast slab, preheating for working and a multiplicity of working operations. Hence transformation of molten metal into a semi-finished product in one operation is obviously an economically desirable aim. Since the War, a number of fully continuous moving-mould machines for casting strip or rod have been developed and these have proved successful and competitive with conventional methods for manufacture of such products. Examples of such machines are the following:

The Properzi process: This was the first fully continuous casting wheel, and design changes since the War have greatly improved the efficiency of operation, so that the process is simple and economic. Present-day machines produce a rod of about 1·5 sq. in. cross-section on a water-cooled casting wheel with a copper rim and iron side plates. The groove is closed by a water-cooled steel belt. Molten metal passes through a cast-iron holding pot from which it is metered to the wheel cavity by a flow control device. During passage of the metal from the inlet to the outlet, an angle of 180° is described as illustrated in Fig. 13 and complete freezing of the cross-section is obtained. The usual casting speed is 24–36 r.p.m. The rod at 480°C

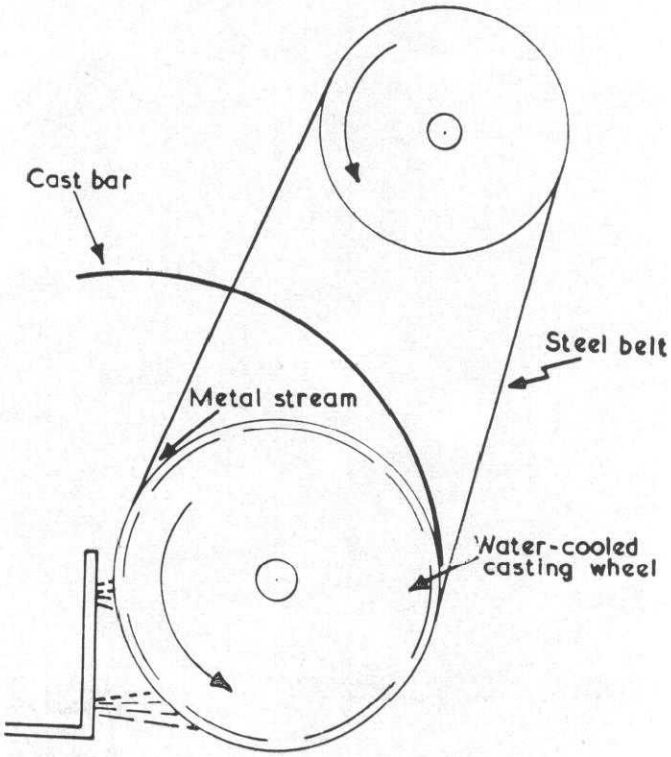

Fig. 13.
Properzi casting process.

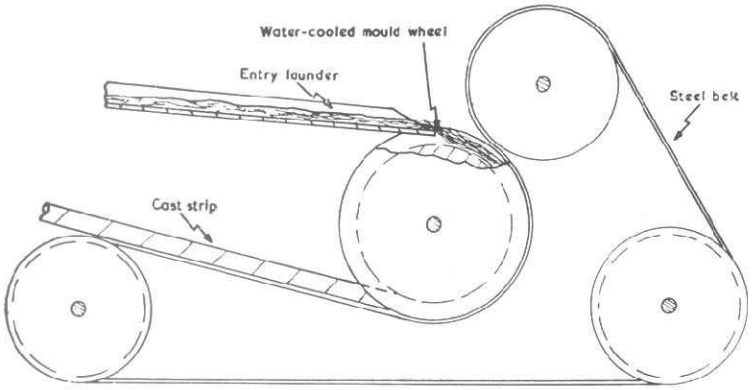

Fig. 14.
Aluminium laboratories casting process.

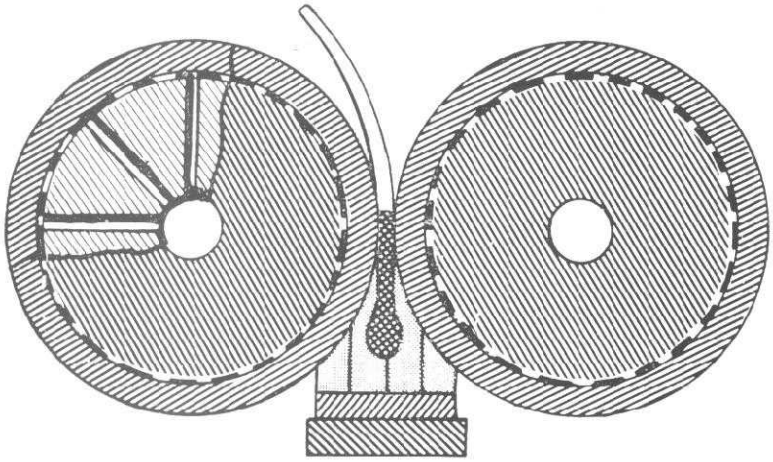

Fig. 15.
The Hunter engineering process casting and rolling principle.

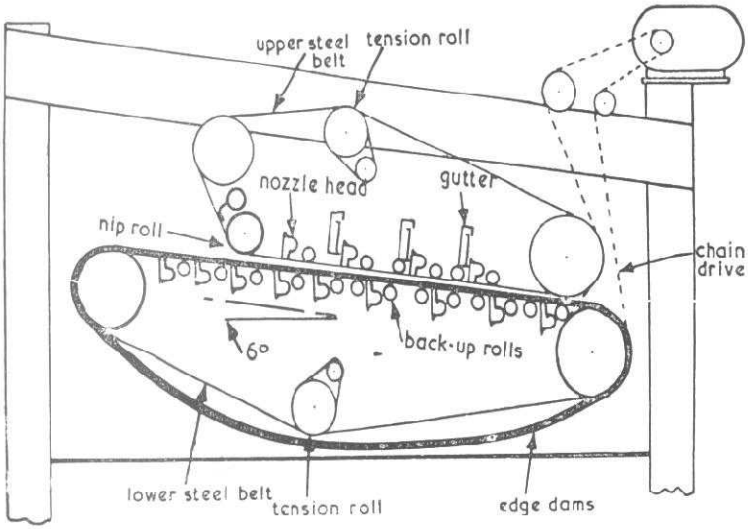

Fig. 16.
Basic principles of the Hazelett machine.

is delivered direct to a multi-stand rolling mill which reduces the rod cross-section to $\frac{3}{8}''$ in diameter.

Aluminium laboratories rotary strip casting process: This machine which is illustrated in diagrammatic form in Fig. 14 was designed to overcome the main disadvantage of the Properzi process, namely, the limitation in cast width, and enable production of aluminium strip. Metal is fed to the top of the water-cooled forged steel mould wheel and completely solid strip is withdrawn from the bottom at a speed of up to 35 r.p.m. Recent patent literature has disclosed a novel form of flow control device for metering metal to this machine. The device consists of a level detector projecting into the pool of metal at the top of the wheel which causes an air pressure device to make corrective changes in metal flow rate.

Hunter engineering process: This is a combined continuous strip casting and rolling machine. Molten metal is delivered through a metal spreader device to the bottom of the gap between two water-cooled rolls (Fig. 15). The rolls serve as a mould in which the metal freezes, and as they rotate, the cast strip receives a hot rolling pass. The machine can produce a 38 in strip at 3/4 r.p.m., which is delivered via a leveller and an edge miller to an up-coiling machine.

Hazelett process: The process produces strip up to 36 in wide on a machine by introducing molten metal between two endless flexible mild steel belts (Fig. 16). Strip thickness is controlled by adjusting the distance between the parallel lengths of the belt, whilst width is controlled by provision of side dams attached to the lower belt. Cooling water sprays are applied to both belts to obtain rapid chilling of metal. Control of heat transfer conditions is added by treating belt surfaces with an insulating dressing and this also improves surface finish of the strip.

Summary of conclusions

The need for increased production rates of aluminium alloy semi-finished products has resulted in a progressive improvement in production methods. Batch melting and methods of metal treatment in older plants have tended to give way to continuous methods in modern plants, and such methods, especially in the field of metal treatment, are becoming increasingly important. Special attention is drawn to continuous methods of degassing, using chlorine, and of oxide removal using the flux washing process.

Looking further ahead, considerable alterations in melting practice are anticipated in the future as new and even revolutionary melting furnaces are developed. Exclusion of molten aluminium from contact with the ambient atmosphere at all stages prior to casting is expected to become common practice. Minimising or eliminating inverse segregation during semi-continuous casting would obviate the need for surface milling prior to processing and result in major economy and acceleration of production. Further developments in fully continuous methods of casting are anticipated.

Acknowledgement

The author gratefully acknowledges the assistance and encouragement of his colleagues and the Directors of Foseco International Limited, by whose permission this paper has been prepared.

References

1. *Non-ferrous Metals Statistics*—October 1959, Organisation for European Economic Co-operation.
2. *Brit. Patent 745, 769*—Kaiser Aluminium and Chemical Corporation.
3. A. Cibula, The Grain Refining of Aluminium Alloy Castings by Addition of Titanium and Boron—*J. Inst. Met.*, Vol. 80 Sept., 1951.
4. D. M. Lewis and J. Savage, The Principles of Continuous Casting of Metals—*Inst. of Metals Metallurgical Reviews*, Vol. 1, 1956.
5. *Brit. Patent 757, 569*—Kaiser Aluminium and Chemical Corporation.
6. G. C. Fear, Continuous Casting of Aluminium—*J. of Metals*, Jan., 1960.

DISCUSSIONS

Mr. N. Majumdar, Indian Aluminium Co. Ltd., Calcutta: I must thank the author for his very interesting paper and I would like to add the following :

The author mentions that holding baths are used for alloying, conditioning and casting in conjunction with melters. In our view, alloying is best done in the melting furnace as this requires stirring of the bath for uniformity of composition. One important reason why holding baths are used is to enable holding of the metal undisturbed for a period before casting so as to effect separation of the oxides. Alloying in the holding bath would defeat this purpose. Secondly, holding baths are normally designed for accurate control of temperature and have relatively low heat input and melting of alloying elements and hardeners in the holding bath would require considerably more time.

The author mentions "flux washing" for removal of oxides. There is another notable development so far as removal of oxides is concerned and that is metal filtration using fibre glass cloth. The advantage of metal filtration over flux washing is that it may be applied at the mould and oxide contamination during laundering from the flux washing tank to the mould is prevented. Secondly, the method is simple and requires no capital investment.

Syphon transfer from melting furnace to the holding bath as well as from holding bath to the casting unit is being increasingly adopted in large installations. The basic advantage of syphon transfer is the rapidity with which a large quantity of metal may be transferred in a relatively short time. Metal flow through a large tapping hole is difficult to control and the rate of transfer as such is limited to about 300 lb/mt/tapping hole whereas, by syphoning as much as 10,000–15,000 lb of metal may be transferred per minute.

Mr. Reeve mentions about continuous degassing using nitrogen or chlorine. In this field there is a notable development, the so-called "gas lift", whereby the level of hydrogen in strong alloys of aluminium may be reduced to a level hitherto unattainable by conventional degassing methods. The principle is simple and is illustrated below :

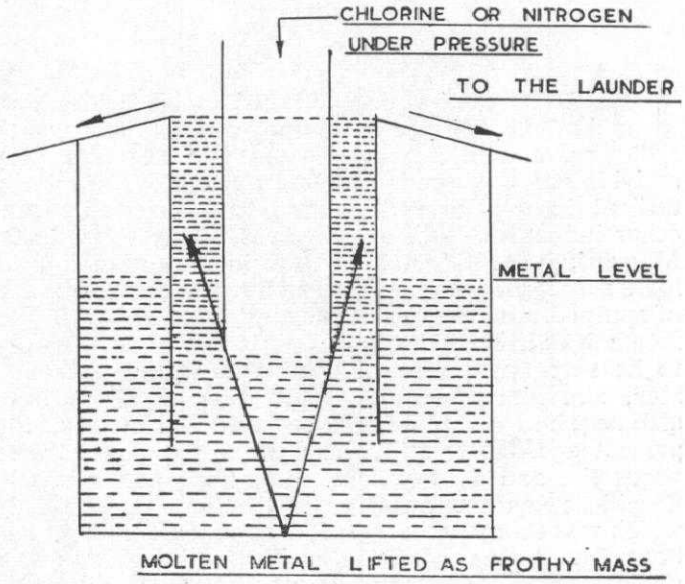

Mr. M. R. Reeve (Author): I am very grateful to Mr. N. Majumdar for his comments and would agree that alloying in the melting furnaces is common practice in most plants. However, in the layout of some modern plants, increased flexibility is achieved by operating one or more holding furnaces in conjunction with one large capacity melter. Alloying in the holding furnaces is perfectly feasible, provided the weight of alloying addition is not too great and one or more different alloys can then be produced from metal melted in a single furnace.

Siphoning devices and also molten metal pumps are, of course, being developed for emptying metal baths. It is understood that difficulties are currently being encountered in devising a refractory with suitable properties for these applications, even the best grades of silicon carbide available being not entirely adequate.

Regarding glass cloth treatment of molten aluminium "filtering", in my opinion, is really a misnomer and "straining" would be a more correct term as the finest cloth normally used is 110 mesh. This cloth will remove only the coarser non-metallic particles and even some of these get through if they are needle shaped, together with finer particles which are a cause of many defects in wrought products. A "chemical filter" or flux washing treatment will remove these finer particles, and is therefore incomparably more efficient.